ActronAir®

SPLIT DUCTED CLASSIC UNIT

INSTALLATION AND COMMISSIONING GUIDE - OUTDOOR

OUTDOOR UNITS

ADD ON	CLASSIC
COOLING ONLY	REVERSE CYCLE
SRC131C	SRE091C*
SRC151C	SRA101C
SRC171C	SRA131C
SRC173C	SRA133C
SRC203C	SRA151C
SRC233C	SRA153C
	SRA171C
	SRA173C
	SRA203C
	SRA233C
	SRA260C

*Above unit illustration shown is an SRA131C unit.
SRE091C has a single horizontal fan configuration.

Please Read This Guide

Congratulations on your purchase of an ActronAir air conditioning unit. This unit has been designed and manufactured with the highest quality standard in mind.

Please read this guide thoroughly and keep it near the unit for future reference.

Copyright © 2017 Actron Engineering Pty. Ltd. All rights reserved.
This manual is a controlled document which contains confidential and proprietary information.
Distribution, modification, copying and/or reproduction are prohibited without written consent from ActronAir.

TABLE OF CONTENTS

General Information 2
Safety Instructions 3
Installation Information 4
Components Overview 5
Unit Dimensions and Clearances 6
Unit Lifting Procedures 14
Unit Preparation 15
Field Pipe Connection 16
Electrical Installation 21
Control Cable Length and Specification 23
Refrigerant Charging 25
Maintenance 29
Maintenance Frequency Checklist 30
Troubleshooting Guide 32
Status and Fault Codes 34
Key Components List..... 35
Startup and Commissioning Report..... 36

PRODUCT INSPECTIONS
Fully check your air conditioning unit and all items against the bill of loading upon receiving your shipment. Inspect the unit, components and accessories for any sign of shipping damage. If there is any damage to the unit, contact ActronAir Customer Care Department immediately on: **1300 522 722.**

Check the unit nameplate to verify the model, serial number, electrical rated specifications and details are correct.

CODES, REGULATIONS AND STANDARDS
The installer/contractor assumes responsibility to ensure that unit installation complies with the relevant council, state/federal codes, regulations and building code standards. All electrical wiring must be in accordance with current electrical authority regulations and all wiring connections to be as per electrical diagram provided with the unit.

GENERAL INFORMATION

The ActronAir air conditioning units are designed for applications where superior performance, high efficiency, reliability, supply air quality and quiet operation are the prime priorities. The units are built with the latest technology, which incorporated the advanced scroll compressor, EC indoor fans (on most models), low-noise outdoor fans and an intelligent electronic control.

For optimum efficiency, your air conditioning unit will deliver the right amount of cooling or heating capacity that you demand. At extreme ambient conditions, the unit can still supply the air conditioning requirement at peak performance.

Energy Efficient Refrigeration Circuits
The ActronAir refrigeration system was designed with the application of highly efficient capacity circuit that deliver the required amount of cooling or heating to maintain your desired space comfort at optimum efficiency.

The refrigeration circuit consists of:

- High efficiency scroll compressor.
- Blue epoxy coat coil protected condenser designed for optimum performance and efficiency with corrugated fins and riffled tubing
- Blue epoxy coat coil protected evaporator coil designed for optimum performance and efficiency with lanced fins and riffled tubing

Evaporator Section
The Classic series evaporator section has EC fans (on most models) which deliver the nominated airflow. The fans provide superior performance for your comfort at optimum efficiency:

- Highly efficient EC motor that uses less energy than the traditional AC motor.
- Low noise operation.

Condenser Section
Uses two (2) efficient axial fans (excluding SRE091C) and a state of the art scroll compressor, with the following features:

- Highly efficient axial fans with direct drive AC motor
- Low noise operation

Electrical Section
The electrical section is composed of a separate panel for controls, protecting the components from the elements.

Durable Design and Construction
ActronAir is an Australian manufacturer with proven high quality air conditioning products. Known for their durability and reliable performance, these products are designed and built to withstand the extreme weather conditions.

The heavy gauge zinc and galvanized steel cabinet, with powder coated epoxy enamel finish, resists the toughest conditions. The louvered outdoor coil guard protects the condenser from any potential damage brought by hail, stones and other solid objects that may be projected to the unit.

Blue Epoxy Coat Coil Protection heat exchangers ensures an enhanced heat transfer with increased performance efficiency.

System Flexibility
The ActronAir air conditioning units are the first choice for residential, office, schools and other air conditioning facilities applications, both for new construction or retrofitting projects.

Sustainability and Environmentally Friendly
The air conditioning system is supplied with zero ozone depleting R-410A refrigerant, which has no phase out or replacement concern.

With cooling and heating performance capacity that are among the best in the market, the ActronAir air conditioning units provide the solution for the reduction of energy consumption, CO2 emission, high fuel dependency and high network grid demand.

Refrigerant Handling and Accountability
ActronAIr strongly urges that all service technicians make every effort possible to reduce the emission of refrigerants to the atmosphere. Everyone must act in a responsible manner to conserve refrigerants and in accordance to the industry code of practice.

SAFETY INSTRUCTIONS

1. Only licensed HVAC technicians* should install and service this air conditioning equipment. Improper service or alteration by unqualified technician could result in significant and major damage to the product or property which may render your warranty null and void. Such unqualified service could also lead to severe physical injury or death. Follow all safety instructions in this literature and all warning labels that are attached to the equipment.
2. Prevailing WH&S regulations must be observed and will take precedence to the safety instructions contained on this manual. Safe work practices and environment must be the paramount importance in the performance of all the service procedures.
3. Ensure that unit installation complies with relevant council regulations and building code standards.
4. All electrical wiring must be in accordance with current electrical authority regulations and all wiring connections to be as per electrical diagram provided.
5. Secure the fans against accidental contact. Beware of pinch point and sharp edges which can cause cutting injury.
6. Always wear appropriate PPE, remove any dangling jewellery and protect long hair by wearing a cap.
7. Make sure that safety guards and panel covers are always firmly secured and not damaged.
8. This appliance is not intended for use by young children or infirm persons unless they have been adequately supervised by a responsible person to ensure that they can use the appliance safely. Young children should be supervised to ensure that they do not play with the appliance.
9. Installer must incorporate a means of electrical disconnection (isolator) in the sub mains fixed wiring in accordance with the Australian wiring rule (AS3000).
10. Secure the power cords and control cables that goes in/out the unit. Use the cable ties provided in the control box.

*Qualifications required will be appropriate Electrical, Refrigeration and Refrigerant Handling License and Training, dependent on local State/Territory regulations.

DANGER

Hazardous Voltage - Risk of Electrocution.
TURN-OFF the power from main isolator before proceeding with any service work of the unit. Observe proper TAG and LOCK-OUT procedures for electrical appliances in order to prevent accidental switching-on of the power supply.

WARNING

EC Motors are fitted with high power capacitors and can have dangerous residual voltages at motor terminals after power has been isolated.

Wait at least 5 minutes after power isolation and test for any residual voltage before beginning service work.

CAUTION

Beware of Rotating Fans !
Ensure that indoor and outdoor fans are isolated and have come to a complete stand still before servicing the equipment. Beware of pinch point and sharp edges which can cause cutting injury. Secure the fans against accidental contact.
Always wear appropriate PPE and remove any dangling jewellery and protect long hair by wearing a cap. Ensure that no loose clothing can be caught / entangled in moving parts.

VISUAL INSPECTION AND WORK ASSESSMENT

Work areas and conditions must first be assessed and evaluated for any potential hazardous conditions. It is also important to be familiar with the unit parts and components before proceeding with any service task.

ActronAir is constantly seeking ways to improve the design of it's products, therefore specifications are subject to change without notice.
Copyright © 2017 Actron Engineering Pty. Ltd.

INSTALLATION INFORMATION

All service technicians handling refrigerant must be licensed to handle refrigerant gases.

Recover and Recycle Refrigerants
Never release refrigerant to the atmosphere! It is an offence in Australia to do so. Always recover, recycle and reuse refrigerants. When removing from the system, properly contain and identify refrigerants in its dedicated container for proper disposal and/or storage. Always consider the recycle or reclaim requirements of the refrigerant before beginning the recovery procedures. Obtain a chemical analysis of the refrigerant if necessary. Refer recovered refrigerant and acceptable refrigerant quality to existing standards and regulations.

Refrigerant Handling and Safety
Consult the refrigerant manufacturer's material safety data sheet (MSDS) for information on proper handling and to fully understand health, safety, storage and disposal requirements. Use the approved containment vessels and refer to appropriate safety standards. Comply with all applicable transportation standards when shipping refrigerant containers.

Service Equipment and Recovery Procedures
Always use refrigerant reclaiming equipment in order to minimise refrigerant emissions. Use equipment and methods which will pull the lowest possible system vacuum while recovering and condensing refrigerant. Equipment capable of pulling a vacuum of less than 500 microns of mercury is required.

Do not open the system to the atmosphere for service work until refrigerant is fully removed and/or recovered. Perform refrigeration system evacuation, prior to charging, in accordance with AIRAH / IRHACE Refrigerant handling code of practice.

Let the unit stand for 1 hour and with the vacuum not rising above 500 microns of mercury. A rise above 500 microns indicates a leak from the system and a leak test is required to locate and repair any leak.

⚠ CAUTION

A leak test is always required on any repaired section of the refrigeration system.

Charge refrigerant into the system only after the equipment does not leak or contain moisture. Ensure that R410A is only charged in liquid form on the discharge side. Take into consideration the correct amount of refrigerant charge specified for the system to ensure efficient unit operations. When charging is complete, reclaim refrigerant from charging lines into an approved refrigerant container. Seal all used refrigerant containers with approved closure devices to prevent unused refrigerant from escaping to the atmosphere, Take extra care to maintain all service equipment directly supporting refrigerant service work such as gauges, hoses, vacuum pumps and recycling equipment.

Use only cleaning solvents that do not have ozone depletion factors. Properly dispose of used cleaning materials.

INSTALLATION PREPARATION

Pre-Installation considerations
The following items must be considered before beginning the unit installation:

- Verify the unit capacities and ratings with the unit nameplate
- Make certain the floor or foundation is level, solid and have sufficient structural strength to support the unit and accessories weight.
- Install anti-vibration rubber (installer to supply) under ***all of the unit's feet*** to help reduce noise and minimize vibration transfer through the foundation. Ensure that all anti-vibration rubbers are rated to provide stable support without impairing the unit's structural integrity.
- Diameter or width of anti-vibration rubber's must be at least equal to the width of the actual feet to prevent deformation overtime.
- Preferably use anti-vibration rubber pads on residential units (up to 26kW split ducted).
- Allow minimum recommended clearances for periodic maintenance and service access.
- Allow sufficient space above the unit for the outdoor air discharge. Condenser air inlet, located on the coil side of the unit, requires sufficient airflow clearance for the optimum unit performance.
- Note the supply air and return air location. Ensure sufficient spaces are allocated for ductworks.
- Wiring connections must be in accordance with the wiring diagram provided with the unit.
- Make sure all wirings are in accordance with local electricity authority regulations and standards.
- Do not install the unit close to an area where there is a danger of fire due to volatile, explosive, flammable and/ or hazardous materials.
- Ensure that spaces around the unit are free from any obstructions for optimum unit performance.

⚠ IMPORTANT

This outdoor unit is designed to match only with ActronAir indoor unit as specified in the Technical Selection Catalogue.

This unit is designed for use with R-410A refrigerant only.

The unit is supplied with factory charged R-410A refrigerant. Be aware of all the relevant regulations concerning the handling of refrigerant.

COMPONENTS OVERVIEW

OUTDOOR UNIT COMPONENTS OVERVIEW

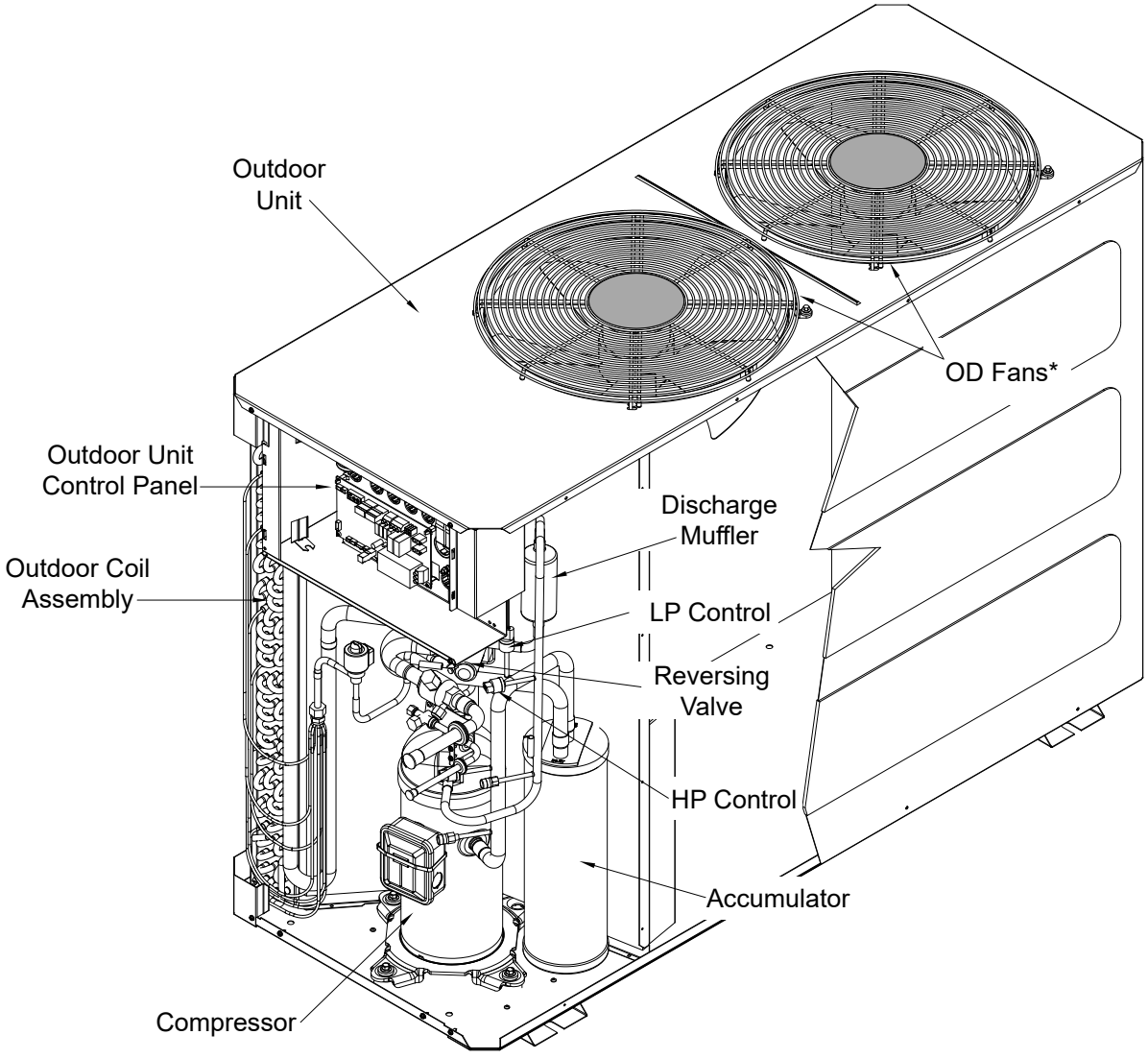

*For illustration purposed only. Actual unit may vary.
Above top discharge unit shown represent 10-26kW unit.
SRE091C has a single front discharge fan configuration.

ActronAir is constantly seeking ways to improve the design of it's products, therefore specifications are subject to change without notice.
Copyright © 2017 Actron Engineering Pty. Ltd.

UNIT DIMENSIONS / CLEARANCES

SRE091C

OVERALL NOMINAL DIMENSION (H x W x L)
= 805 x 1000 x 370
USE M12 BOLT FOR FEET MOUNTING

PLEASE NOTE THAT UNDER ALL CIRCUMSTANCES, CONDENSER AIR MUST NOT RECIRCULATE BACK ONTO CONDENSER COIL. KEEP ALL CLEARANCES FREE OF ANY OBSTRUCTIONS

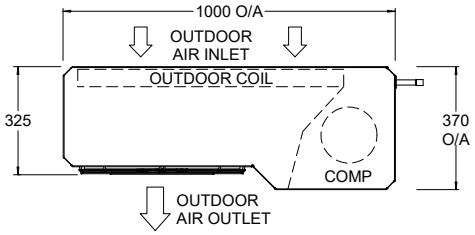

TOP VIEW

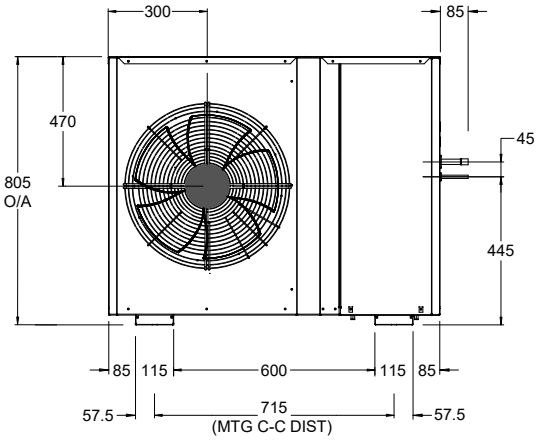

SIDE VIEW

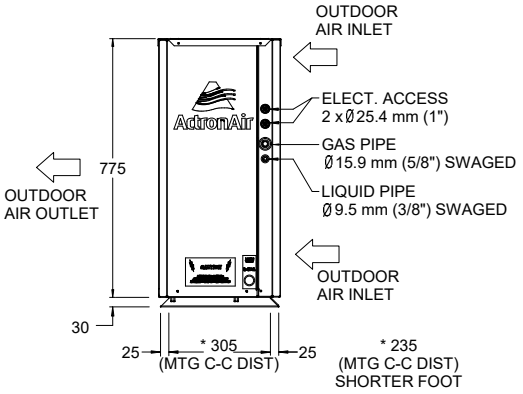

FRONT VIEW

UNIT MODEL NUMBER	UNIT WEIGHT (kg)	CORNER WEIGHTS (kg)			
		A	B	C	D
SRE091C	83.0	7.0	30.0	18.0	28.0

MINIMUM SERVICE ACCESS AREAS AND AIRFLOW CLEARANCES

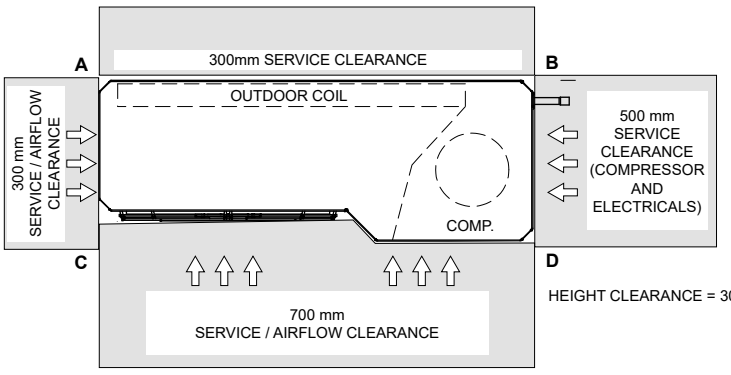

NOTES:

THIRD ANGLE PROJECTION

1. Do not scale drawing. All dimensions are in mm unless specified. Refer to corresponding unit dimensional drawing for mounting hole details.
2. Service Access Areas and Spaces for Airflow Clearances given above are suggested minimum based on the condition that the spaces around the units are free from any obstructions and a walkway passage of 1000mm between the units or between the unit and the outside perimeter is available.
3. Minimum service access areas and spaces for airflow clearances are responsibilities of the installer, ActronAir will not be held liable for any extra charges incurred due to lack of access and space for airflow.
4. Under all circumstances, condenser air must not recirculate back onto condenser coil. Keep all clearance free of any obstructions.
5. Maximum External Static of Outdoor Fans is 5 Pa.
6. STACKING OF UNITS: Ensure that minimum airflow and clearances are met.
7. Refer to pipe Connection Details on Specifications Sheet.
8. MTG C-C DIST = Mounting Centre to Centre Distance.
9. Use M12 bolt for feet mounting.

UNIT DIMENSIONS / CLEARANCES

SRA101C

OVERALL NOMINAL DIMENSION (H x W x L)
= 940 x 1245 x 535
USE M12 BOLT FOR FEET MOUNTING

PLEASE NOTE THAT UNDER ALL CIRCUMSTANCES, CONDENSER AIR MUST NOT RECIRCULATE BACK ONTO CONDENSER COIL. KEEP ALL CLEARANCES FREE OF ANY OBSTRUCTIONS

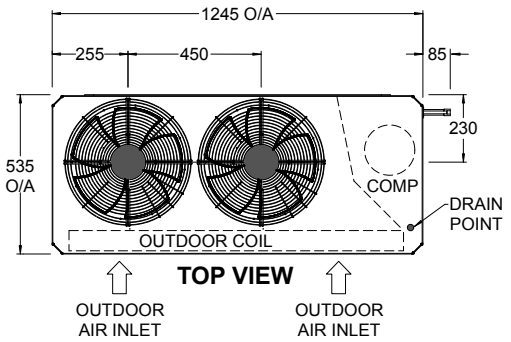

TOP VIEW

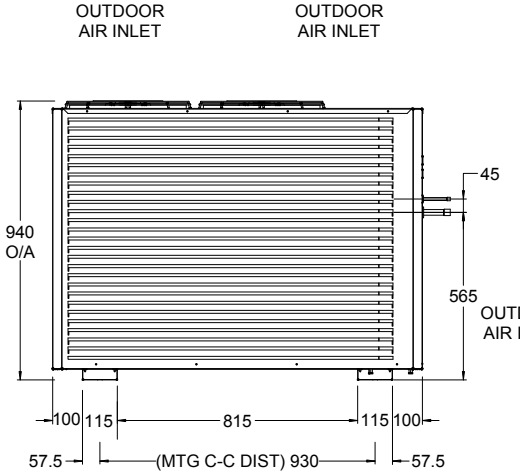

SIDE VIEW

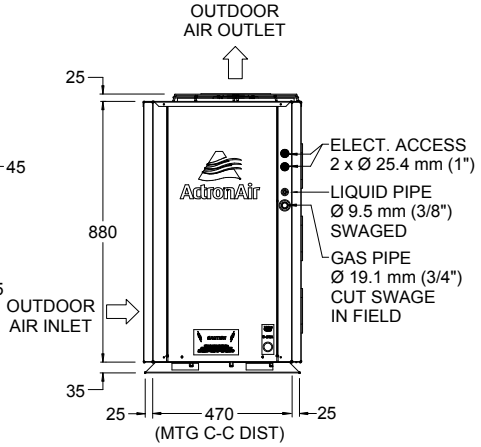

FRONT VIEW

UNIT MODEL NUMBER	UNIT WEIGHT (kg)	CORNER WEIGHTS (kg)			
		A	B	C	D
SRA101C	119	8.0	39.0	27.0	45.0

MINIMUM SERVICE ACCESS AREAS AND AIRFLOW CLEA RANCES

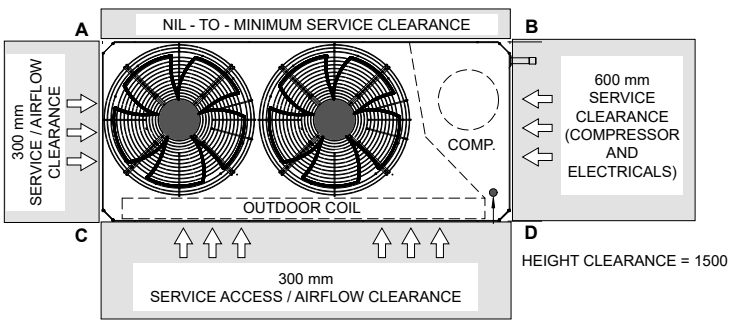

NOTES:

THIRD ANGLE PROJECTION

1. Do not scale drawing. All dimensions are in mm unless specified. Refer to corresponding unit dimensional drawing for mounting hole details.
2. Service Access Areas and Spaces for Airflow Clearances given above are suggested minimum based on the condition that the spaces around the units are free from any obstructions and a walkway passage of 1000mm between the units or between the unit and the outside perimeter is available.
3. Minimum service access areas and spaces for airflow clearances are responsibilities of the installer, ActronAir will not be held liable for any extra charges incurred due to lack of access and space for airflow.
4. Under all circumstances, condenser air must not recirculate back onto condenser coil. Keep all clearance free of any obstructions.
5. Maximum External Static of Outdoor Fans is 5 Pa.
6. STACKING OF UNITS: Ensure that minimum airflow and clearances are met.
7. Refer to pipe Connection Details on Specifications Sheet.
8. MTG C-C DIST = Mounting Centre to Centre Distance.
9. Use M12 bolt for feet mounting.

ActronAir is constantly seeking ways to improve the design of it's products, therefore specifications are subject to change without notice.
Copyright © 2017 Actron Engineering Pty. Ltd.

UNIT DIMENSIONS / CLEARANCES

SRA131C / SRA133C
SRC131C

OVERALL NOMINAL DIMENSION (H x W x L)
= 990 x 1320 x 580
USE M12 BOLT FOR FEET MOUNTING

PLEASE NOTE THAT UNDER ALL CIRCUMSTANCES, CONDENSER AIR MUST NOT RECIRCULATE BACK ONTO CONDENSER COIL. KEEP ALL CLEARANCES FREE OF ANY OBSTRUCTIONS

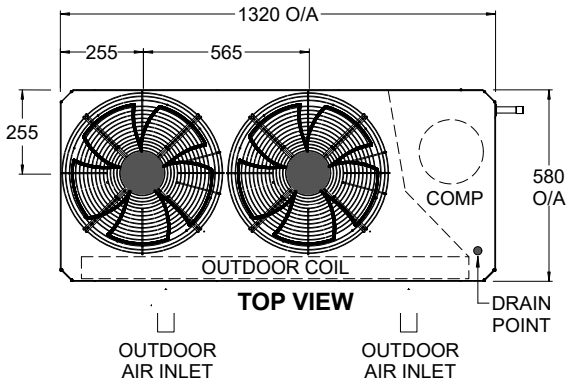

TOP VIEW

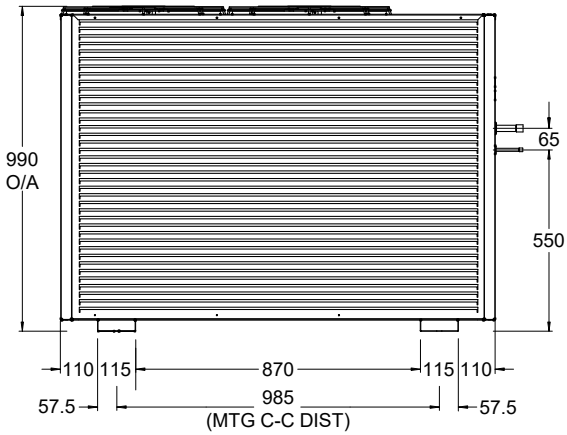

SIDE VIEW

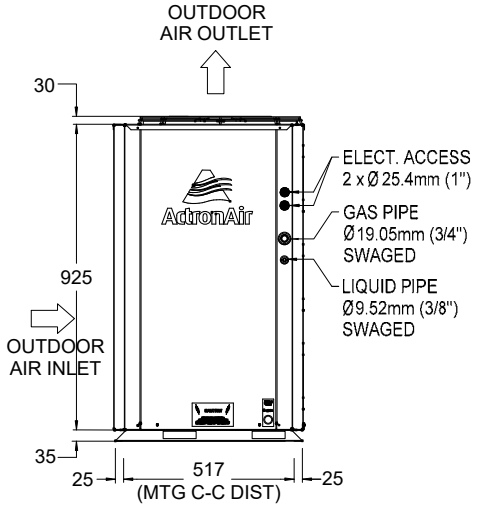

FRONT VIEW

UNIT MODEL NUMBER	UNIT WEIGHT (kg)	CORNER WEIGHTS (kg)			
		A	B	C	D
SRA131C / SRC131C	135	9.9	44.3	28.6	52.2
SRA133C	133	9.9	43.8	28.1	51.2

MINIMUM SERVICE ACCESS AREAS AND AIRFLOW CLEARANCES

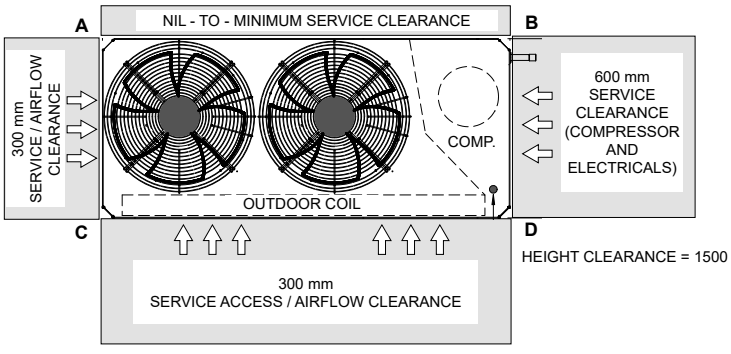

NOTES:

THIRD ANGLE PROJECTION

1. Do not scale drawing. All dimensions are in mm unless specified. Refer to corresponding unit dimensional drawing for mounting hole details.
2. Service Access Areas and Spaces for Airflow Clearances given above are suggested minimum based on the condition that the spaces around the units are free from any obstructions and a walkway passage of 1000mm between the units or between the unit and the outside perimeter is available.
3. Minimum service access areas and spaces for airflow clearances are responsibilities of the installer, ActronAir will not be held liable for any extra charges incurred due to lack of access and space for airflow.
4. Under all circumstances, condenser air must not recirculate back onto condenser coil. Keep all clearance free of any obstructions.
5. Maximum External Static of Outdoor Fans is 5 Pa.
6. STACKING OF UNITS: Ensure that minimum airflow and clearances are met.
7. Refer to pipe Connection Details on Specifications Sheet.
8. MTG C-C DIST = Mounting Centre to Centre Distance.
9. Use M12 bolt for feet mounting.

UNIT DIMENSIONS / CLEARANCES

SRA151C / SRA153C
SRC151C

OVERALL NOMINAL DIMENSION (H x W x L)
= 990 x 1320 x 580
USE M12 BOLT FOR FEET MOUNTING

PLEASE NOTE THAT UNDER ALL CIRCUMSTANCES, CONDENSER AIR MUST NOT RECIRCULATE BACK ONTO CONDENSER COIL. KEEP ALL CLEARANCES FREE OF ANY OBSTRUCTIONS

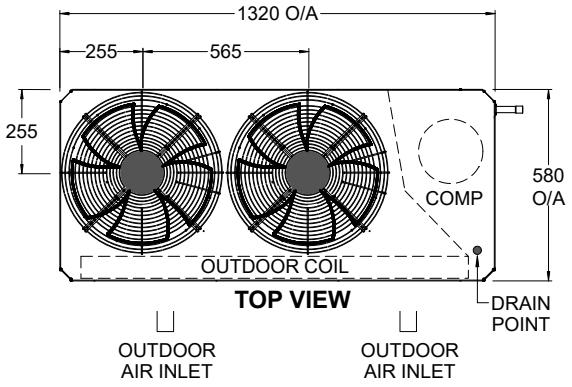

TOP VIEW

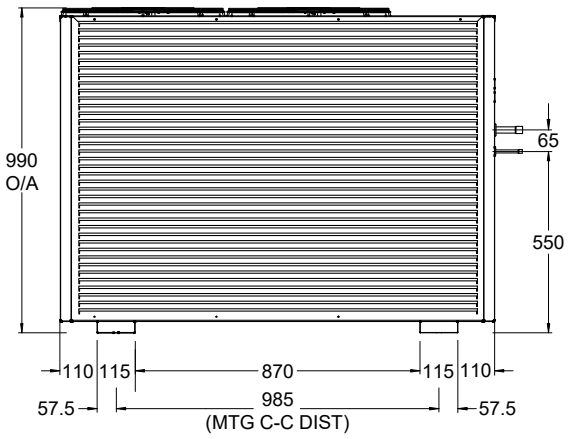

SIDE VIEW

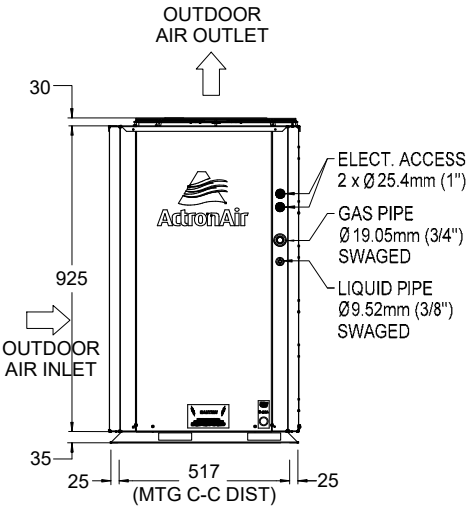

FRONT VIEW

UNIT MODEL NUMBER	UNIT WEIGHT (kg)	CORNER WEIGHTS (kg)			
		A	B	C	D
SRA151C / SRC151C	136	9.9	44.7	28.8	52.6
SRA153C / SRC153C	135	10.0	44.5	28.5	52.0

MINIMUM SERVICE ACCESS AREAS AND AIRFLOW CLEARANCES

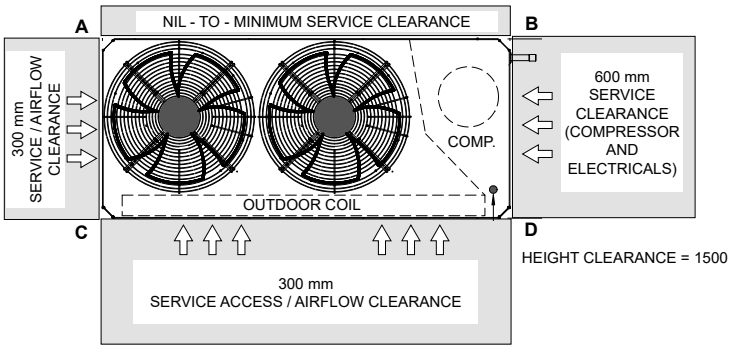

NOTES:

THIRD ANGLE PROJECTION

1. Do not scale drawing. All dimensions are in mm unless specified. Refer to corresponding unit dimensional drawing for mounting hole details.
2. Service Access Areas and Spaces for Airflow Clearances given above are suggested minimum based on the condition that the spaces around the units are free from any obstructions and a walkway passage of 1000mm between the units or between the unit and the outside perimeter is available.
3. Minimum service access areas and spaces for airflow clearances are responsibilities of the installer, ActronAir will not be held liable for any extra charges incurred due to lack of access and space for airflow.
4. Under all circumstances, condenser air must not recirculate back onto condenser coil. Keep all clearance free of any obstructions.
5. Maximum External Static of Outdoor Fans is 5 Pa.
6. STACKING OF UNITS: Ensure that minimum airflow and clearances are met.
7. Refer to pipe Connection Details on Specifications Sheet.
8. MTG C-C DIST = Mounting Centre to Centre Distance.
9. Use M12 bolt for feet mounting.

ActronAir is constantly seeking ways to improve the design of it's products, therefore specifications are subject to change without notice.
Copyright © 2017 Actron Engineering Pty. Ltd.

UNIT DIMENSIONS / CLEARANCES

SRA171C / SRA173C
SRC171C / SRC173C

OVERALL NOMINAL DIMENSION (H x W x L)
= 1045 x 1460 x 580
USE M12 BOLT FOR FEET MOUNTING

PLEASE NOTE THAT UNDER ALL CIRCUMSTANCES, CONDENSER AIR MUST NOT RECIRCULATE BACK ONTO CONDENSER COIL. KEEP ALL CLEARANCES FREE OF ANY OBSTRUCTIONS

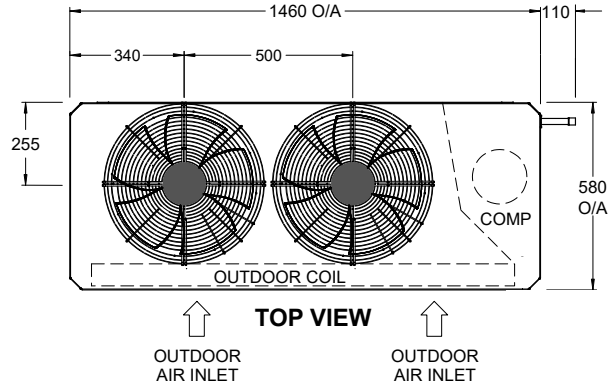

TOP VIEW

OUTDOOR AIR INLET

OUTDOOR AIR INLET

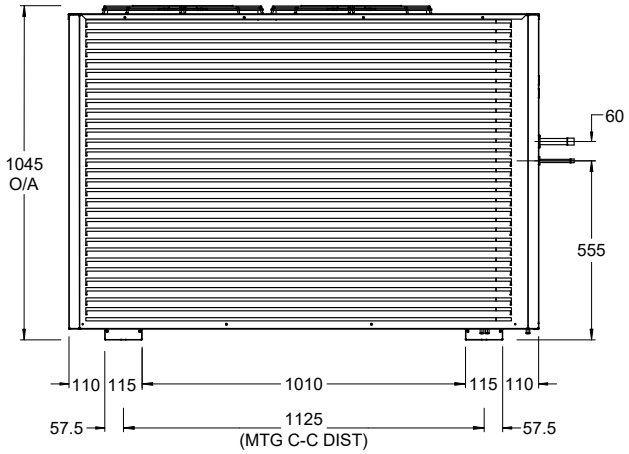

SIDE VIEW

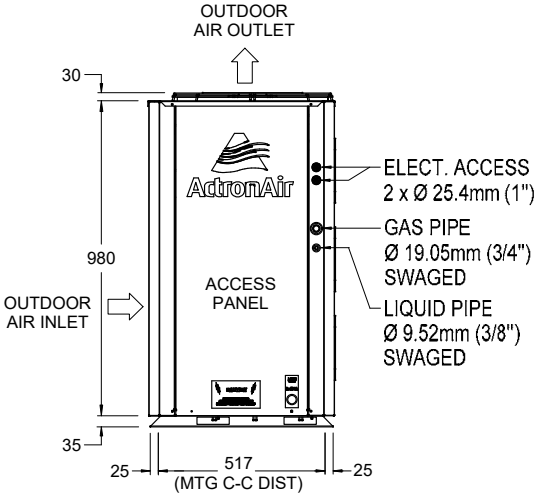

FRONT VIEW

UNIT MODEL NUMBER	UNIT WEIGHT (kg)	CORNER WEIGHTS (kg)			
		A	B	C	D
SRA171C / SRC171C	176	11.1	71.4	34.7	58.8
SRA173C / SRC173C	174	10.9	70.6	34.3	58.2

MINIMUM SERVICE ACCESS AREAS AND AIRFLOW CLEARANCES

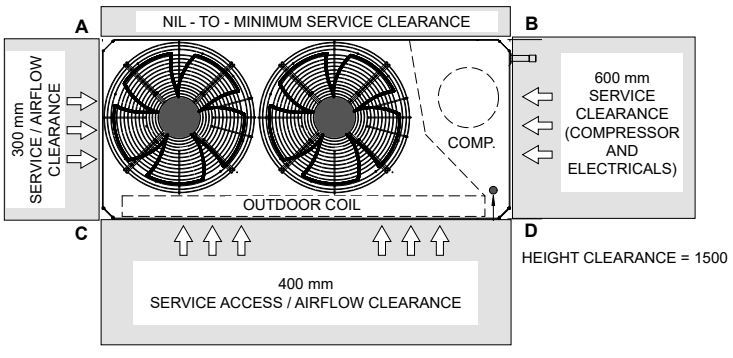

NOTES:

THIRD ANGLE PROJECTION

1. Do not scale drawing. All dimensions are in mm unless specified. Refer to corresponding unit dimensional drawing for mounting hole details.
2. Service Access Areas and Spaces for Airflow Clearances given above are suggested minimum based on the condition that the spaces around the units are free from any obstructions and a walkway passage of 1000mm between the units or between the unit and the outside perimeter is available.
3. Minimum service access areas and spaces for airflow clearances are responsibilities of the installer, ActronAir will not be held liable for any extra charges incurred due to lack of access and space for airflow.
4. Under all circumstances, condenser air must not recirculate back onto condenser coil. Keep all clearance free of any obstructions.
5. Maximum External Static of Outdoor Fans is 5 Pa.
6. STACKING OF UNITS: Ensure that minimum airflow and clearances are met.
7. Refer to pipe Connection Details on Specifications Sheet.
8. MTG C-C DIST = Mounting Centre to Centre Distance.
9. Use M12 bolt for feet mounting.

UNIT DIMENSIONS / CLEARANCES

SRA203C
SRC203C

OVERALL NOMINAL DIMENSION (H x W x L)
= 1045 x 1460 x 580
USE M12 BOLT FOR FEET MOUNTING

PLEASE NOTE THAT UNDER ALL CIRCUMSTANCES, CONDENSER AIR MUST NOT RECIRCULATE BACK ONTO CONDENSER COIL. KEEP ALL CLEARANCES FREE OF ANY OBSTRUCTIONS

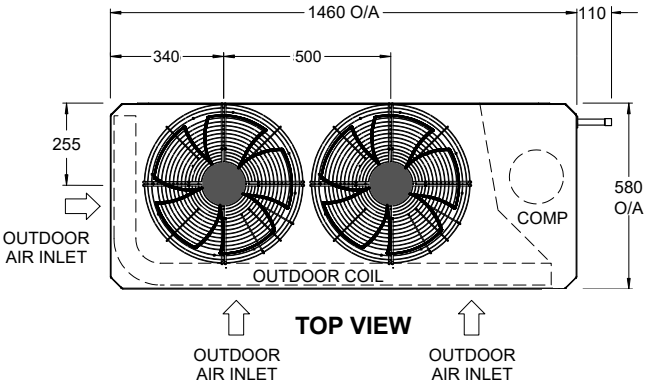

TOP VIEW

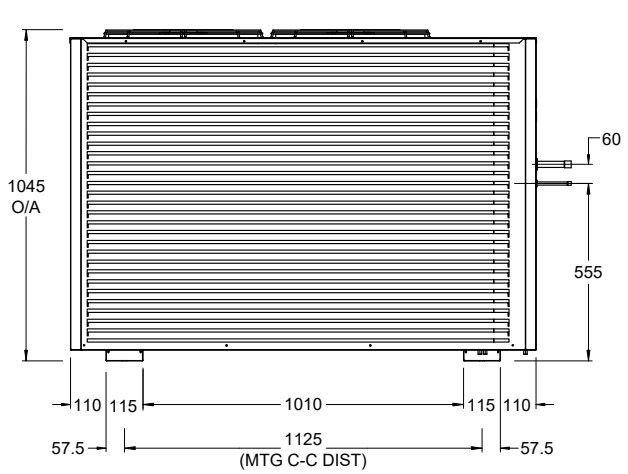

SIDE VIEW

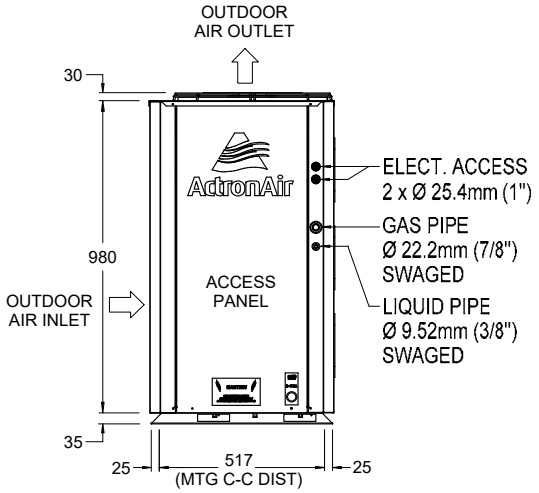

FRONT VtIEW

UNIT MODEL NUMBER	UNIT WEIGHT (kg)	CORNER WEIGHTS (kg)			
		D	B	C	A
SRA203C / SRC203C	185	62.0	75.0	36.5	11.5

MINIMUM SERVICE ACCESS AREAS AND AIRFLOW CLEARANCES

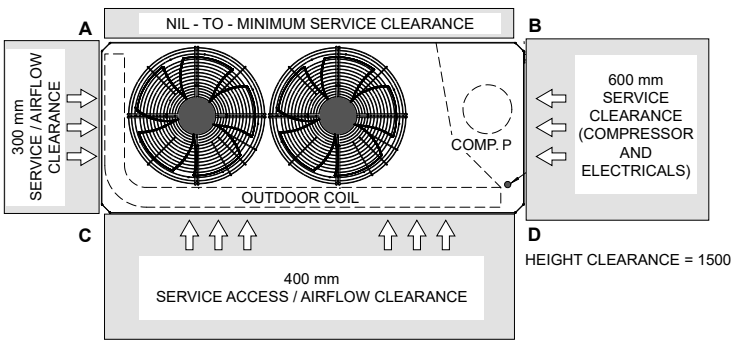

NOTES:

THIRD ANGLE PROJECTION

1. Do not scale drawing. All dimensions are in mm unless specified. Refer to corresponding unit dimensional drawing for mounting hole details.
2. Service Access Areas and Spaces for Airflow Clearances given above are suggested minimum based on the condition that the spaces around the units are free from any obstructions and a walkway passage of 1000mm between the units or between the unit and the outside perimeter is available.
3. Minimum service access areas and spaces for airflow clearances are responsibilities of the installer, ActronAir will not be held liable for any extra charges incurred due to lack of access and space for airflow.
4. Under all circumstances, condenser air must not recirculate back onto condenser coil. Keep all clearance free of any obstructions.
5. Maximum External Static of Outdoor Fans is 5 Pa.
6. STACKING OF UNITS: Ensure that minimum airflow and clearances are met.
7. Refer to pipe Connection Details on Specifications Sheet.
8. MTG C-C DIST = Mounting Centre to Centre Distance.
9. Use M12 bolt for feet mounting.

ActronAir is constantly seeking ways to improve the design of it's products, therefore specifications are subject to change without notice.
Copyright © 2017 Actron Engineering Pty. Ltd.

UNIT DIMENSIONS / CLEARANCES

SRA233C / SRC233C

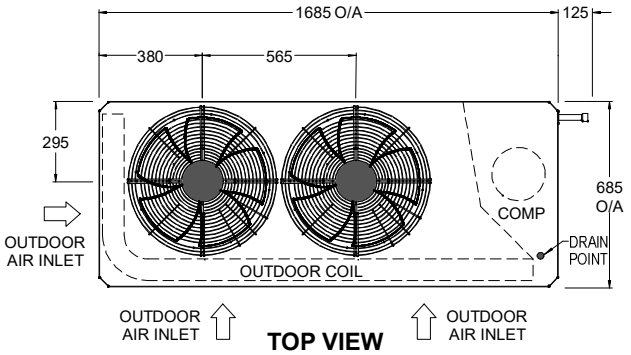

TOP VIEW

OVERALL NOMINAL DIMENSION (H x W x L)
= 1105 x 1685 x 685
USE M12 BOLT FOR FEET MOUNTING

PLEASE NOTE THAT UNDER ALL CIRCUMSTANCES, CONDENSER AIR MUST NOT RECIRCULATE BACK ONTO CONDENSER COIL. KEEP ALL CLEARANCES FREE OF ANY OBSTRUCTIONS

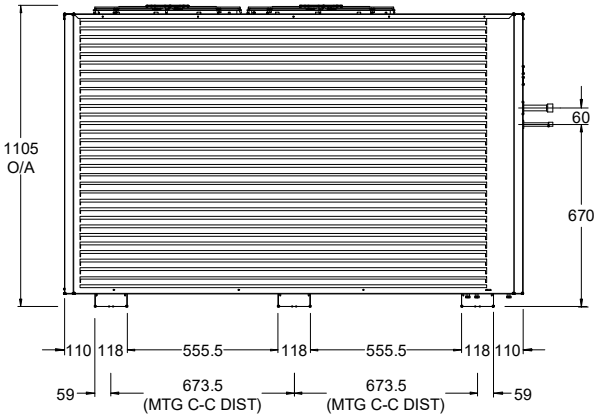

SIDE VIEW

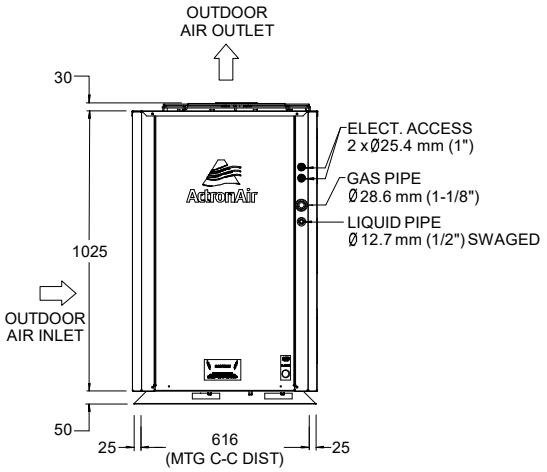

FRONT VIEW

UNIT MODEL NUMBER	UNIT WEIGHT (kg)	WEIGHT DISTRIBUTION (kg)					
		A	B	C	D	LM	RM
SRA233C / SRC233C	200	17.9	63.4	26.8	73.2	7.1	11.6

MINIMUM SERVICE ACCESS AREAS AND AIRFLOW CLEARANCES

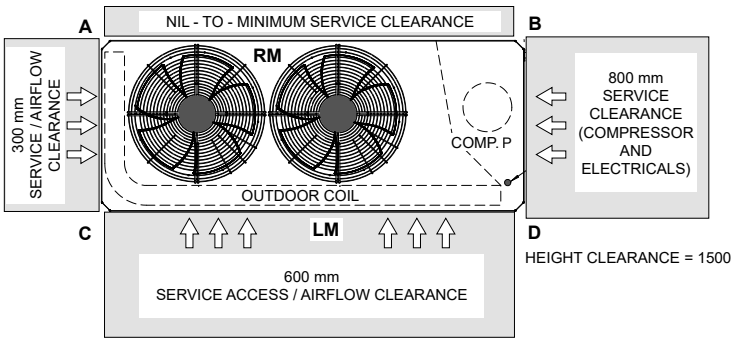

NOTES:

THIRD ANGLE PROJECTION

1. Do not scale drawing. All dimensions are in mm unless specified. Refer to corresponding unit dimensional drawing for mounting hole details.
2. Service Access Areas and Spaces for Airflow Clearances given above are suggested minimum based on the condition that the spaces around the units are free from any obstructions and a walkway passage of 1000mm between the units or between the unit and the outside perimeter is available.
3. Minimum service access areas and spaces for airflow clearances are responsibilities of the installer, ActronAir will not be held liable for any extra charges incurred due to lack of access and space for airflow.
4. Under all circumstances, condenser air must not recirculate back onto condenser coil. Keep all clearance free of any obstructions.
5. Maximum External Static of Outdoor Fans is 5 Pa.
6. STACKING OF UNITS: Ensure that minimum airflow and clearances are met.
7. Refer to pipe Connection Details on Specifications Sheet.
8. MTG C-C DIST = Mounting Centre to Centre Distance.
9. Use M12 bolt for feet mounting.

UNIT DIMENSIONS / CLEARANCES

SRA260C

OVERALL NOMINAL DIMENSION (H x W x L)
= 1105 x 1685 x 685
USE M12 BOLT FOR FEET MOUNTING

PLEASE NOTE THAT UNDER ALL CIRCUMSTANCES, CONDENSER AIR MUST NOT RECIRCULATE BACK ONTO CONDENSER COIL. KEEP ALL CLEARANCES FREE OF ANY OBSTRUCTIONS

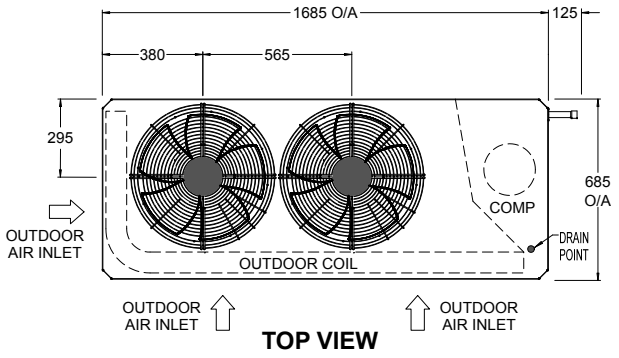

TOP VIEW

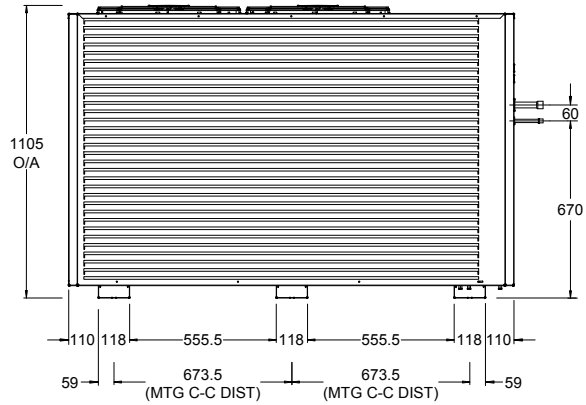

SIDE VIEW

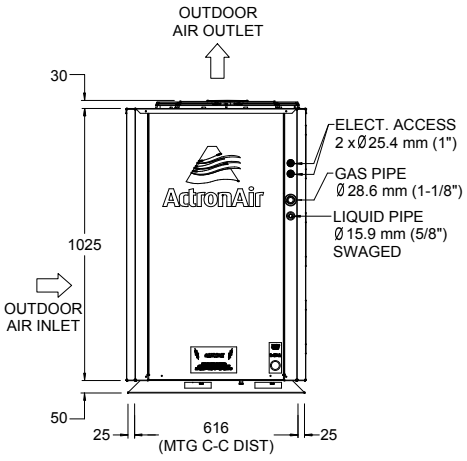

FRONT VIEW

UNIT MODEL NUMBER	UNIT WEIGHT (kg)	WEIGHT DISTRIBUTION (kg)					
		A	B	C	D	LM	RM
SRA260C	245	16.0	81.3	22.5	76.0	24.6	24.6

MINIMUM SERVICE ACCESS AREAS AND AIRFLOW CLEARANCES

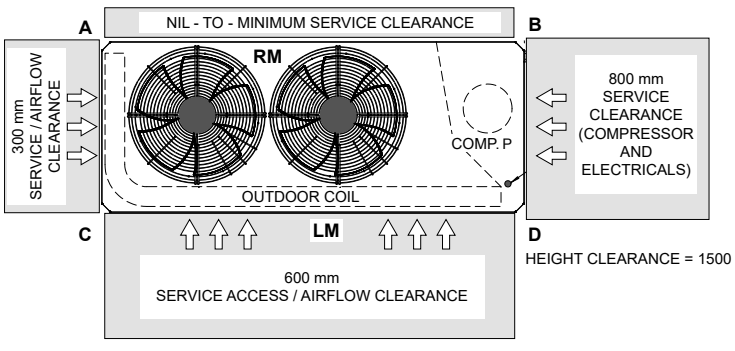

NOTES:

THIRD ANGLE PROJECTION

1. Do not scale drawing. All dimensions are in mm unless specified. Refer to corresponding unit dimensional drawing for mounting hole details.
2. Service Access Areas and Spaces for Airflow Clearances given above are suggested minimum based on the condition that the spaces around the units are free from any obstructions and a walkway passage of 1000mm between the units or between the unit and the outside perimeter is available.
3. Minimum service access areas and spaces for airflow clearances are responsibilities of the installer, ActronAir will not be held liable for any extra charges incurred due to lack of access and space for airflow.
4. Under all circumstances, condenser air must not recirculate back onto condenser coil. Keep all clearance free of any obstructions.
5. Maximum External Static of Outdoor Fans is 5 Pa.
6. STACKING OF UNITS: Ensure that minimum airflow and clearances are met.
7. Refer to pipe Connection Details on Specifications Sheet.
8. MTG C-C DIST = Mounting Centre to Centre Distance.
9. Use M12 bolt for feet mounting.

ActronAir is constantly seeking ways to improve the design of it's products, therefore specifications are subject to change without notice.
Copyright © 2017 Actron Engineering Pty. Ltd.

UNIT LIFTING PROCEDURES

A. CRANE LIFTING METHOD

NOTE: Crane lifting method is recommended for high rise lifting.

Connect the loop ends of slings unto shackle

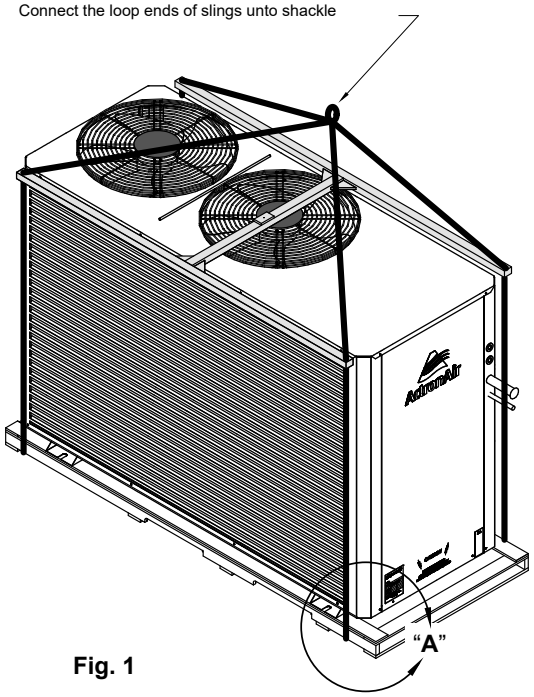

Fig. 1

⚠ WARNING

WH&S regulations must be observed and will take precedence during lifting process.

EQUIPMENT REQUIRED FOR CRANE LIFTING:
- 1 x shackle
- 2 x nylon slings
- spreader bar

NOTE: Refer to catalogue for unit weight before selecting shackles and slings.

PROCEDURE:
1. Slip nylon slings through the pallet as shown in Fig. 1.
2. Use a Bow or Dee shackle to connect the slings.
3. Ensure slings are protected by rubber pads or similar if slings are draped across unit edges, corners, or air grilles . This will prevent the unit from being damaged during lifting.
4. SPREADER BAR must be used when lifting the unit.
5. Test lift the unit to determine exact unit balance and stability before hoisting it to the installation location.

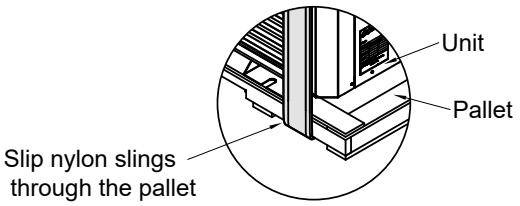

Detail - "**A**"

B. FORK LIFT METHOD

PROCEDURE:
1. To move the unit around with a forklift, insert the fork tines through the unit feet assembly, as shown in Fig. 2.
2. Only fork the unit through compressor end or side of the unit (See illustration for location of compressor end)

⚠ CAUTION

DO NOT LIFT UNIT from this end.

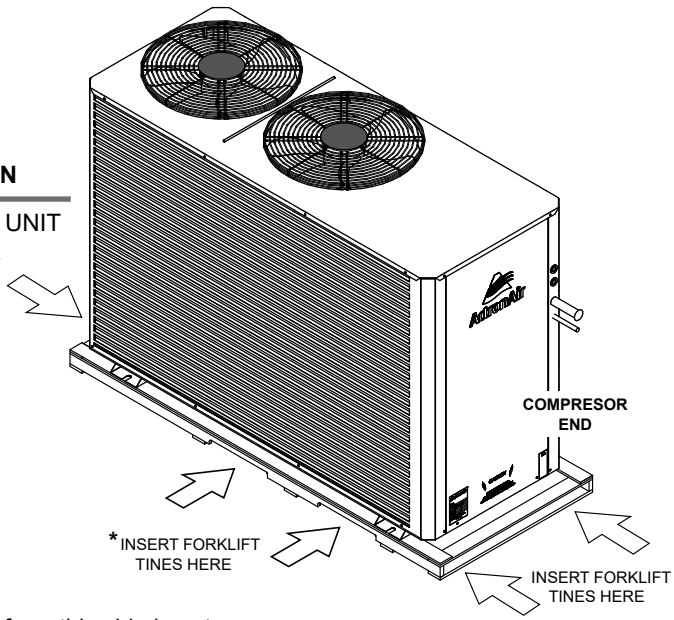

* Forklift pick from this side is not available on some models.

Fig. 2

⚠ DANGER

Make sure rigging equipment, accessories and plant are sufficiently and safely capable to lift the unit in order to prevent potential damage to property, severe personal injury or death. Check unit weight and weight distribution points on unit drawing dimensions section.

⚠ IMPORTANT

Lifting procedure and unit model shown are suggestions and for illustration purposes only.

It is highly recommended that installer observe current industry safe and sound rigging and lifting procedure.

⚠ NOTE

For pallet drawing and dimensions, contact ActronAir Customer Care on 1300 135 995.

⚠ CAUTION

Length of fork lift tines must pass the unit middle section, in order to safely carry the unit.

UNIT PREPARATION

1. Remove mounting screws, as shown below:

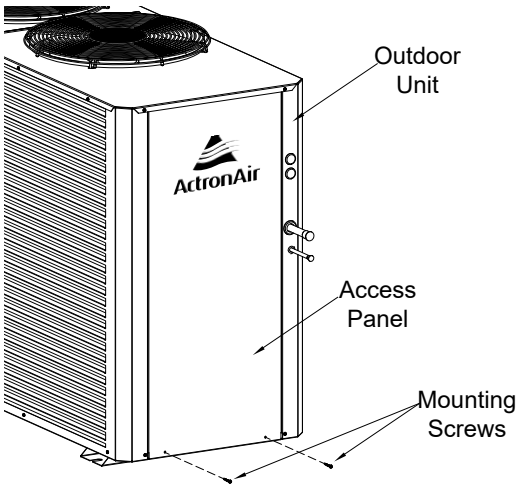

2. Remove Access Panel.

• Remove Access Panel-Electrical as illustrated below:

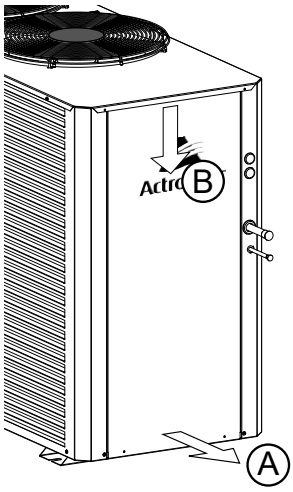

Removal Order:
Ⓐ Pull-Out a bit
Ⓑ Pull-Down to remove
Access Panel-Electrical

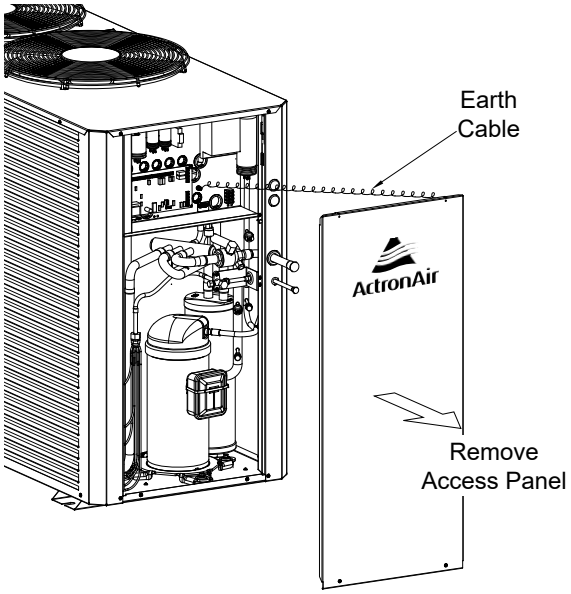

3. Install Interconnecting Field Pipes

• Solder refrigeration piping. Refer to piping sections for details of field pipe sizes and piping installation procedure.

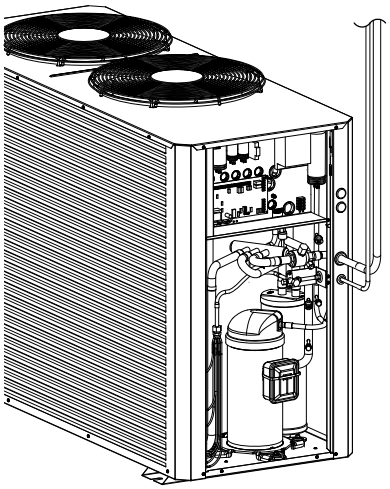

NOTES:

• There is an earth cable attached to the access panel. This must be disconnected first to fully remove the access panel.
• It is important to re-connect the earth cable when re-assembling the access panel.

ActronAir is constantly seeking ways to improve the design of it's products, therefore specifications are subject to change without notice.
Copyright © 2017 Actron Engineering Pty. Ltd.

FIELD PIPE CONNECTION

⚠ CAUTION

The units described in this guide use R-410A refrigerant, which operates at a pressure approximately 1.6 times higher than similar systems using R22. When installing equipment using R-410A refrigerant, there are number of standards that must be met:

- The system of this unit operates with Polyolester (POE) oil that rapidly absorbs moisture.
- The maximum time any system can be opened to atmosphere is 15 minutes.
- It is important to work with absolute cleanliness.
- Brazing must be done with the use of Nitrogen to avoid carbon deposits into the pipes.
- The system must be evacuated thoroughly to 500 microns (see evacuation procedure).
- The system must always be charged with R-410A refrigerant in liquid state.
- Never allow R-410A refrigerant to vent into the atmosphere. It is an offence to release refrigerant in Australia.
- Always reclaim refrigerant using equipment and container dedicated for R-410A system use only.
- Only qualified technicians are allowed to perform any work described in this guide.
- All work must be carried out in accordance with Australia and New Zealand refrigerant handling code of practice.

Maximum allowable total equivalent field pipe length is 60 metres, see diagram below. This includes all the equivalent pipe fitting loses and vertical height difference. Vertical height difference must not exceed 20 metres. Table 1 below shows the equivalent straight pipe length of elbow fittings.

TABLE 1: EQUIVALENT STRAIGHT PIPE LENGTH OF ELBOW FITTINGS (METRES)

Pipe size Nominal Diameter	90° Long Radius Elbow	90° Short Radius Elbow	45° Long Radius Elbow	45° Short Radius Elbow
9.5 (3/8”)	0.24	0.36	0.09	0.14
15.9 (5/8”)	0.30	0.45	0.15	0.23
19.1 (3/4”)	0.40	0.60	0.18	0.27
22.2 (7/8”)	0.46	0.69	0.21	0.32
25.5 (1”)	0.52	0.78	0.24	0.36
28.6 (1-1/8”)	0.55	0.83	0.27	0.41

Selected field pipe sizes must match the recommended sizes in table above. If the installation requires different field pipe diameter due to different application condition other than recommended, contact ActronAir for advice.

Most of unit pipe connections are factory swaged to easily fit to the recommended field pipe diameter.

When it is required to install other refrigeration devices, such as refrigerant drier, solenoid valve and the like, include the equivalent straight pipe length of the device in the calculation of total equivalent field pipe length.

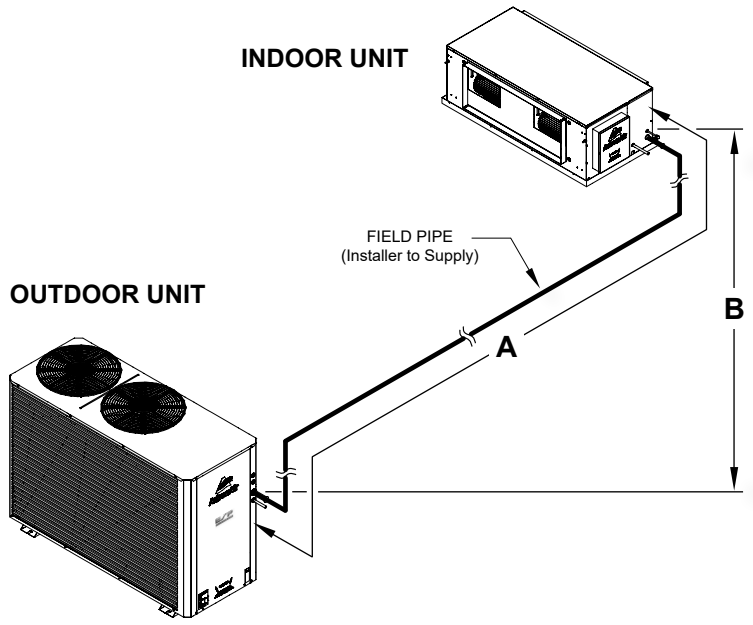

A = EQUIVALENT PIPE LENGTH, 60 meters (max)

B = VERTICAL HEIGHT, 20 meters (max)

FIELD PIPE CONNECTION

EXAMPLE TOTAL EQUIVALENT FIELD PIPE LENGTH CALCULATIONS

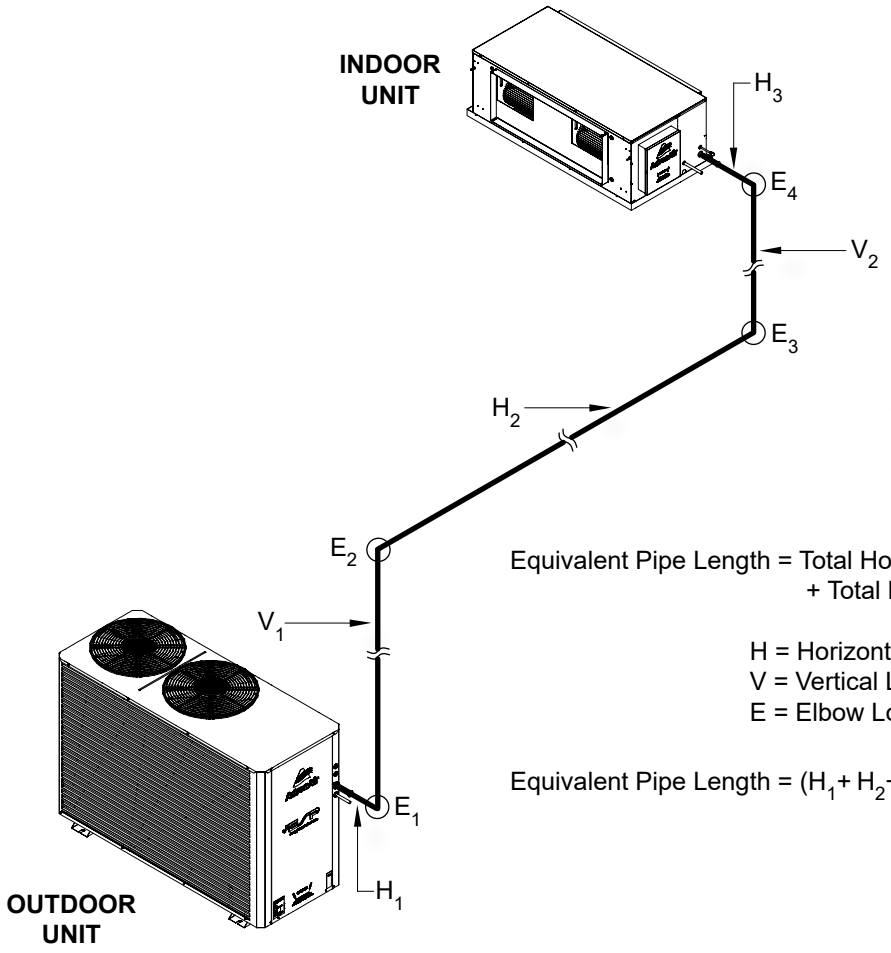

Illustration shown as calculation examples only. It is the responsibility of the Installer to design an efficient refrigeration piping lay out for optimum unit performance.

Equivalent Pipe Length = Total Horizontal Length + Total Vertical Length + Total Losses from Elbows

H = Horizontal Length
V = Vertical Length
E = Elbow Losses

Equivalent Pipe Length = $(H_1 + H_2 + H_3) + (V_1 + V_2) + (E_1 + E_2 + E_3 + E_4)$

TABLE 2: REFRIGERATION PIPING		Classic Single Phase				
Outdoor Model		SRE091C	SRA101C	SRA131C SRC131C	SRA151C SRC151C	SRA171C SRC171C
Indoor Model		SRG091E	SRG101E	SRG131E	SRG151E	SRG171E
Max. Equivalent Pipe Length Range	metres	0 - 25	0 - 60	0 - 60	0 - 60	0 - 60
Max. Vertical Height Differential (1)	metres	20	20	20	20	2 0
Field Pipe Size						
Liquid Line	mm (inch)	3/8 (9.5)	3/8 (9.5)	3/8 (9.5)	3/8 (9.5)	3/8 (9.5)
Gas Line	mm (inch)	5/8 (15.9)	5/8 (15.9)	3/4 (19.1)	3/4 (19.1)	3/4 (19.1)
Outdoor Pipe Size						
Liquid Line	mm (inch)	3/8 (9.5) (2)	3/8 (9.5) swaged	3/8 (9.5) swaged	3/8 (9.5) swaged	3/8 (9.5) swaged
Gas Line	mm (inch)	5/8 (15.9) swaged	3/4 (19.1) swaged (3)	3/4 (19.1) swaged	3/4 (19.1) swaged	3/4 (19.1) swaged
Indoor Pipe Size						
Liquid Line	mm (inch)	3/8 (9.5) swaged	3/8 (9.5) swaged	3/8 (9.5) swaged	3/8 (9.5) swaged	3/8 (9.5) swaged
Gas Line	mm (inch)	5/8 (15.9) swaged	5/8 (15.9) swaged	3/4 (19.1) swaged	3/4 (19.1) swaged	3/4 (19.1) swaged

Note: (1) Included in maximum field pipe length.
(2) Factory fitted with schrader valve. To be cut-off and swaged in the field to fit field pipe.
(3) Cut Swaged End in the field to fit field pipe.

ActronAir is constantly seeking ways to improve the design of it's products, therefore specifications are subject to change without notice.
Copyright © 2017 Actron Engineering Pty. Ltd.

TABLE 3: REFRIGERATION PIPING		Classic Three Phase					
Outdoor Model		SRA133C	SRA153C	SRA173C SRC173C	SRA203C SRC203C	SRA233C SRC233C	SRA260C
Indoor Model		SRG131E	SRG151E	SRG171E	SRG201E	SRG231E	SRA260E
Max. Equivalent Pipe Length Range	metres	0 - 60	0 - 60	0 - 60	0 - 60	0 - 60	0 - 60
Max. Vertical Height Differential (1)	metres	20	20	20	20	20	20
Field Pipe Size							
Liquid Line	mm (inch)	3/8 (9.52)	3/8 (9.52)	3/8 (9.52)	1/2 (12.7) (2)	1/2 (12.7)	5/8 (15.9)
Gas Line	mm (inch)	3/4 (19.05)	3/4 (19.05)	3/4 (19.05)	7/8 (22.22)	1 (25.4)	1 (25.4)
Outdoor Pipe Size							
Liquid Line	mm (inch)	3/8 (9.52) swaged	3/8 (9.52) swaged	3/8 (9.52) swaged	3/8 (9.52) swaged (3)	1/2 (12.7) swaged	5/8 (15.9) swaged
Gas Line	mm (inch)	3/4 (19.05) swaged	3/4 (19.05) swaged	3/4 (19.05) swaged	7/8 (22.22) swaged	1-1/8 (28.6) ID to fit field pipe	1-1/8 (28.6) ID to fit field pipe
Indoor Pipe Size							
Liquid Line	mm (inch)	3/8 (9.52) swaged	3/8 (9.52) swaged	3/8 (9.52) swaged	3/8 (9.52) swaged (3)	1/2 (12.7) swaged	5/8 (15.9) swaged
Gas Line	mm (inch)	3/4 (19.05) swaged	3/4 (19.05) swaged	3/4 (19.05) swaged	7/8 (22.22) swaged	1 (25.4) swage in field to fit 1 (25.4)	1 (25.4) swaged

Note: (1) Included in maximum field pipe length.
(2) For pipe run s 0-20m 3/8” can be used.
(3) Cut Swaged End in the field to fit field pipe.

FIELD PIPE CONNECTION

CAUTION

Brazed joints should only be made while purging Nitrogen through the system.
Failure to do so will cause carbon deposit to be left on the internal pipe surface, that in turn can cause system failure and void of warranty.

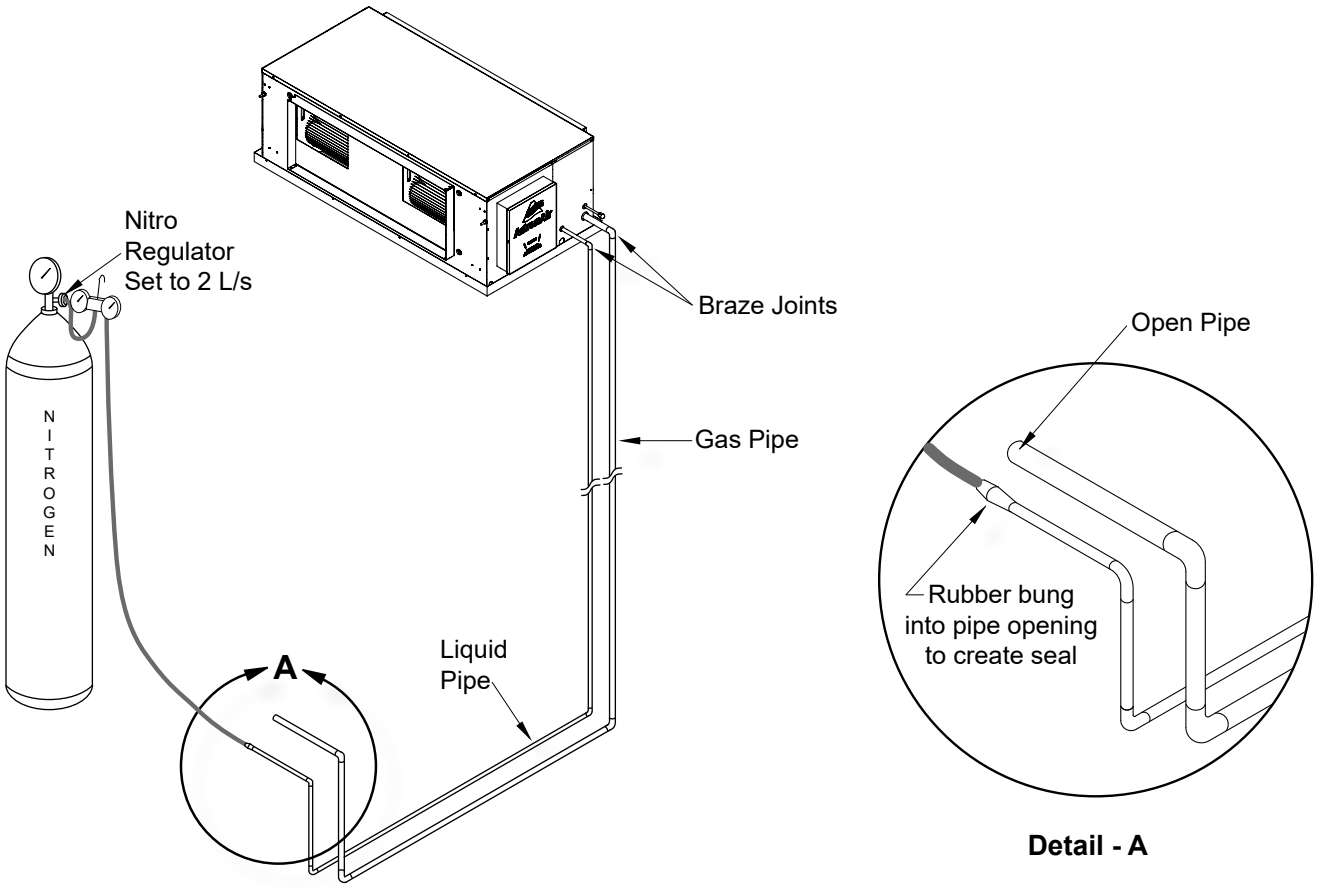

Installing interconnecting pipe work to indoor, nitrogen bleed procedure (First fit or rough in stage only)

1. Run interconnecting pipe work from condenser location to evaporator.
2. Release pressure in evaporator and remove caps.
3. Fit copper tube into tail, set nitro bottle and regulator up at condenser end of pipe work.
4. Fit nitrogen line into suction with rubber bung to seal the connection. The seal will prevent air being sucked into pipe work.
5. Leave liquid line open, set nitro regulator for nitrogen to flow through pipe work at 2 l/s flow rate @20kPa.
6. Braze required joints as quick as possible.

See Diagram Above:

Installing interconnecting pipe work to outdoor, nitrogen bleed procedure (First fit or rough in stage only)

1. Starting with circuit 1 system, remove piping caps from the condenser and fit pipe work into tails.
2. Fit nitro hose onto suction ball valve and fit open hose onto liquid line post valve.
3. Set nitrogen regulator to 2 l/s flow rate through pipe work and evaporator.
4. Braze remaining joints as quick as possible.
5. Allow the brazed joints to cool and conduct leak test in the connections.
6. Pressurize the system to 2500kPa in stages. A recommended pressure test is to be performed for no less than 1 hour at 2500kPa.

ActronAir is constantly seeking ways to improve the design of it's products, therefore specifications are subject to change without notice.
Copyright © 2017 Actron Engineering Pty. Ltd.

FIELD PIPE CONNECTION

See Diagram Below:

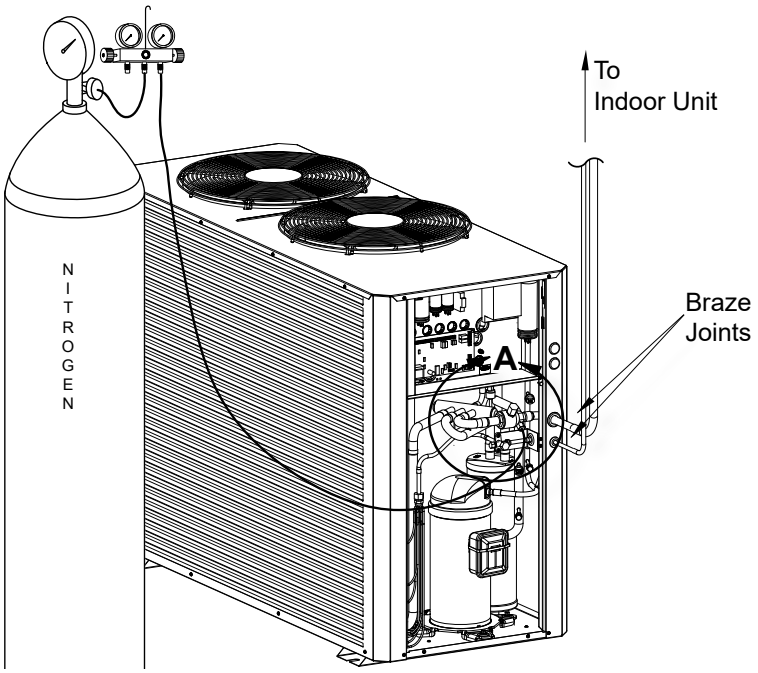

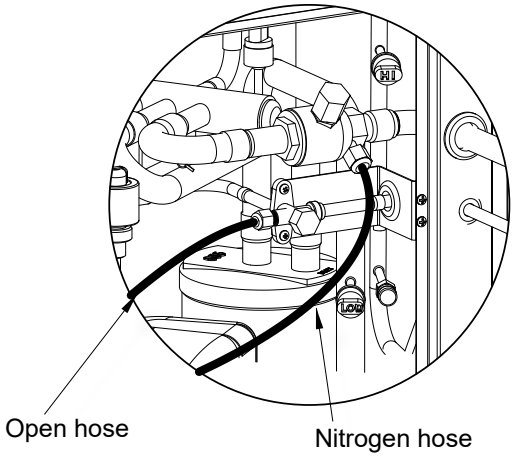

Detail - A

⚠ IMPORTANT

Importance of Evacuation:

- Any non-condensable product left in the system can cause the pressure in the high side of the system to increase and in turn, the compression temperature to rise.
- Moisture will result in adverse reaction in the refrigerant circuit.
- The POE oil used in the R-410A compressor is hygroscopic, which means that it absorbs moisture from the air. To prevent chemical reactions in the system, any moisture must be removed at all costs.
- Oxygen (air) reacts with the compressor oil and can lead to faults such as compressor failure.

Evacuation Procedure (Triple Evacuation)

1. Fit service gauges to the ball valves (liquid line service valve and suction line service valve).
2. Evacuate the system to 1000 microns.
3. Check vacuum with vacu stat. Break the vacuum with dry Nitrogen to 100kPa
4. Release Nitrogen pressure. Evacuate to 500 microns.
5. Check vacuum with vacu stat. Break the vacuum with dry Nitrogen to 100kPa
6. Release Nitrogen pressure. Evacuate to 500 microns.
7. Check vacuum with vacu stat.
8. Open valves.

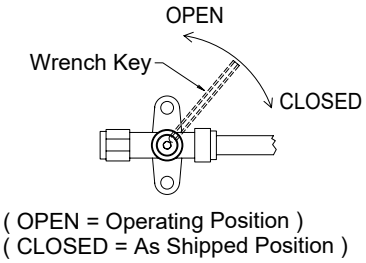

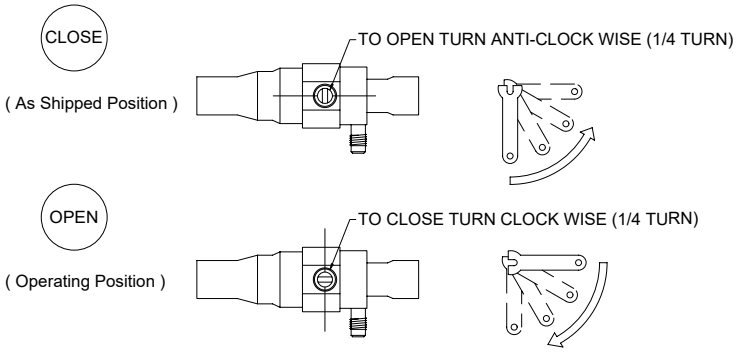

ELECTRICAL INSTALLATION

All electrical work must be carried out by a qualified technician. Make sure all wiring is in accordance with local wiring rules. Wiring connections should be made in accordance with the wiring diagram provided.

DANGER

Live Electrical Supply !
During installation of your air conditioning unit, it may be necessary to work in close proximity to live electricity. Only qualified technicians are allowed to perform these tasks.

Follow all electrical safety precautions when exposed to live electrical components.

Wiring Diagram
The wiring diagram specific for your air conditioning system is located on the inside panel of the control access door. Always refer all wiring installation, servicing and troubleshooting of this equipment to this diagram to ensure correct electrical connection are satisfied.

Supply Power Requirements and Procedures
It is the installer's responsibility to provide power supply wiring to the main isolator. Make sure all wirings are in accordance with local wiring rules. Wiring should conform to all current electrical authority regulations and all wiring connections to be as per electrical diagram provided with the unit.

- Confirm that the power supply available is compatible with the unit nameplate ratings. The supply power must be within 5% of the rated voltage.
- Protect electrical service from over current and short circuit conditions in accordance with AS/NZS 3000 "Australian / New Zealand Wiring Rules". Size protection devices according to the electrical data of the unit.
- Complete the unit power supply wiring onto the main isolator.
- Secure the power cords and control cables that goes in/ out the unit. Use the cable ties provided in the control box.
- Provide proper unit grounding in accordance with local and national codes.

Compressor Voltage Balance Requirement
Check the voltage at the compressor terminals to determine if it is balanced. Voltage imbalance on three phase systems can cause motor overheating and premature failure. The maximum allowable imbalance is ±2.0%, check unit wiring connections to locate and rectify faults, should voltage imbalance exceed this value.

SPLIT UNIT ELECTRICAL CONNECTION

① MAINS WIRING (230VAC) (Single Phase + Neutral) 50Hz
② CONTROL WIRING (230VAC) (Single Phase + Neutral) 50Hz
③ DATA CABLE TO WALL CONTROLLER (4 Core 14/0.20 0.44mm Shielded Data Cable)
④ EXTRA LOW VOLTAGE DATA CONTROL WIRING (2 Core Shielded Twisted Pair 7/0.30 (0.5mm²) Data Cable)

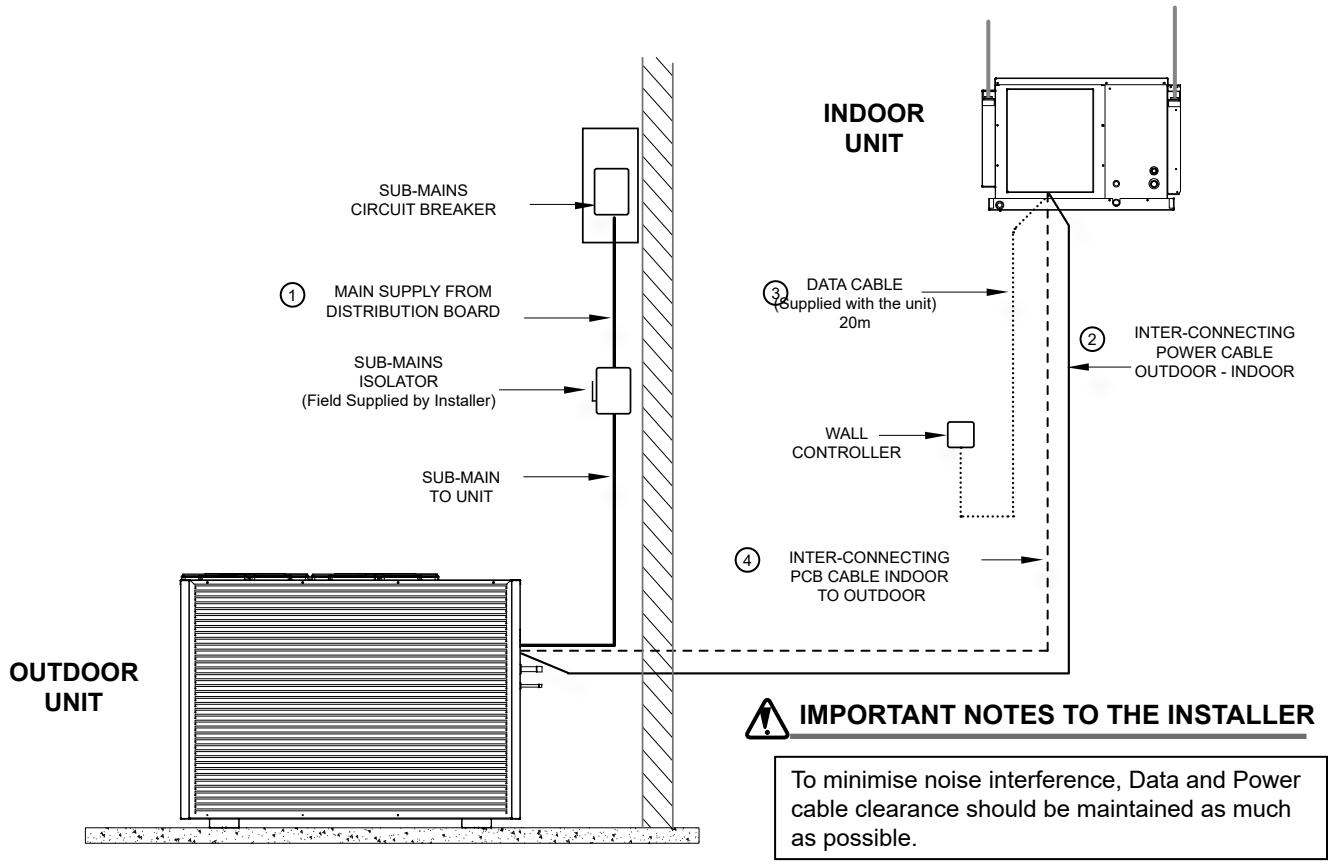

IMPORTANT NOTES TO THE INSTALLER

To minimise noise interference, Data and Power cable clearance should be maintained as much as possible.

ActronAir is constantly seeking ways to improve the design of it's products, therefore specifications are subject to change without notice.
Copyright © 2017 Actron Engineering Pty. Ltd.

ELECTRICAL INSTALLATION

CIRCUIT BREAKER SIZE AND CABLE SIZE REQUIREMENT			
MODEL	Circuit Breaker Size	Cable Size * (mm^2)	
	Amps	MAIN	O.D. to I.D.
SRE091C / SRG091E	20.0	2.5	1.0
SRA101C / SRG101E	25.0	4.0	1.0
SRA131C / SRG131E / SRG131F SRC131C / SRG131E / SRG131F	32.0	6.0	1.0
SRA151C / SRG151E / SRG151F SRC151C / SRG151E / SRG151F	32.0	6.0	1.0
SRA171C / SRG171E / SRG171F SRC171C / SRG171E / SRG171F	40.0	10.0	1.0
SRA133C / SRG131E / SRG131F	16.0	2.5	1.0
SRA153C / SRG151E / SRG151F	20.0	2.5	1.0
SRA173C / SRG171E / SRG171F SRC173C / SRG171E / SRG171F	20.0	2.5	1.0
SRA203C / SRA201E / SRG201F SRC203C / SRA201E / SRG201F	20.0	2.5	1.0
SRA233C / SRA231E / SRG231F SRC233C / SRA231E / SRG231F	25.0	4.0	1.0
SRA260C / SRA260E	25.0	4.0	1.0

* Suggested Minimum Cable Size should be used as a guide only, refer to AS/NZS 3000 “Australian / New Zealand Wiring Rules” for more details.

UPDATED WIRING DIAGRAM IS PROVIDED WITH THE UNIT.
Outdoor Unit: Located at the back of electrical/compressor acess panel.
Indoor Unit: Located at the back of electrical box cover.

CONTROL CABLE LENGTH AND SPECIFICATION

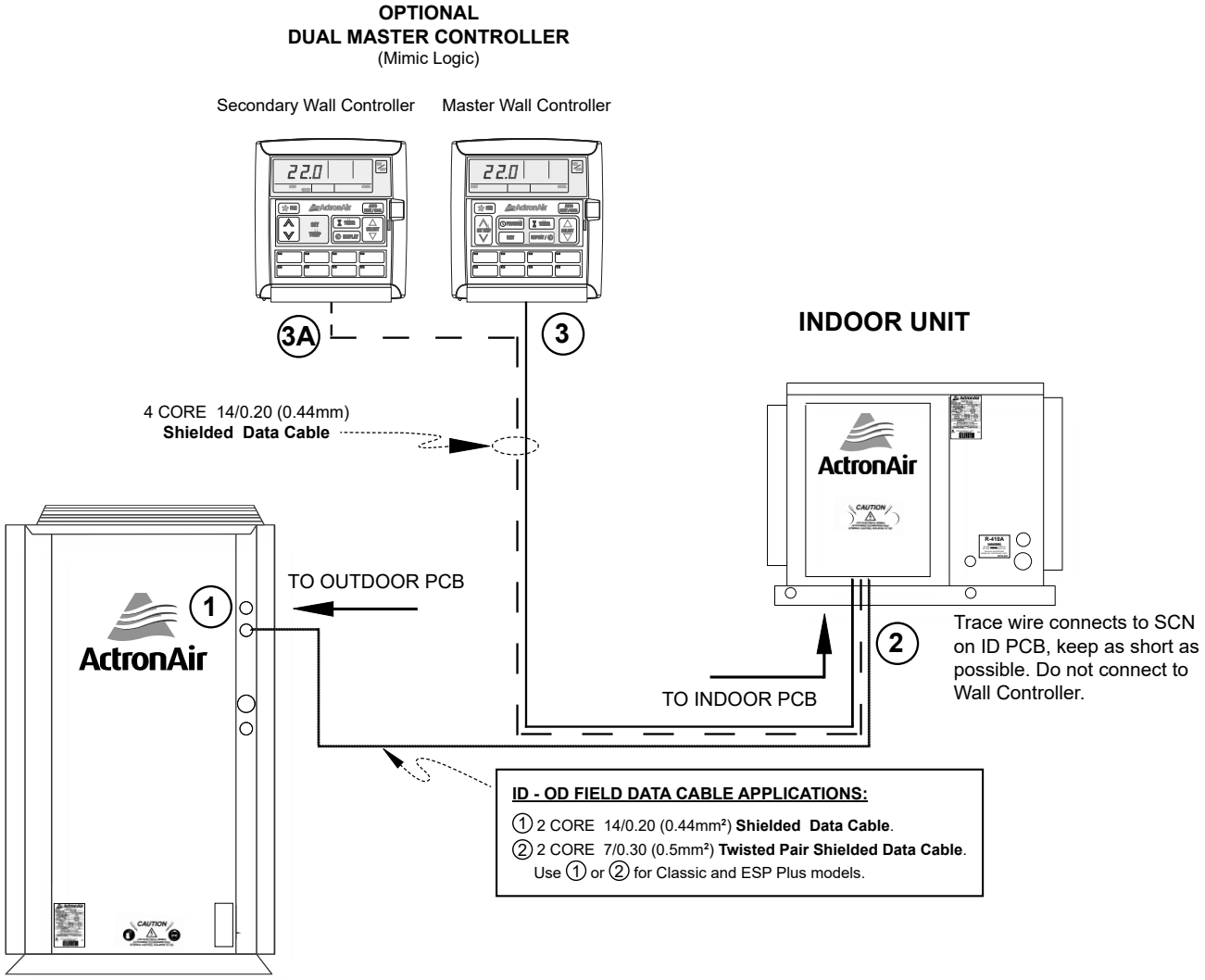

ITEM	DESCRIPTION	MAXIMUM CABLE LENGTH *
1 to 2	Outdoor PCB to Indoor PCB	60 m
2 to 3	Indoor PCB to Master Wall Controller	40 m
2 to 3A	Indoor PCB to Secondary Wall Controller	40m (Including 2 to 3) **

*** Suggested Maximum Cable Length**
Long runs beside Mains cables or TV antenna cables should be avoided where possible.

** Total Cumulative Cable Length with Secondary Controller must not exceed 40 meters.
For example: If 2 to 3 is 30m, then 2 to 3A must not exceed 10m.

NOTES:
DIAGRAM SHOWN ABOVE IS A GENERAL PRESENTATION ONLY.
REFER TO INDIVIDUAL UNIT WIRING DIAGRAM FOR COMPLETE WIRING CONNECTION DETAILS.

ActronAir is constantly seeking ways to improve the design of it's products, therefore specifications are subject to change without notice.
Copyright © 2017 Actron Engineering Pty. Ltd.

CONTROL CABLE LENGTH AND SPECIFICATION (with ZONES)

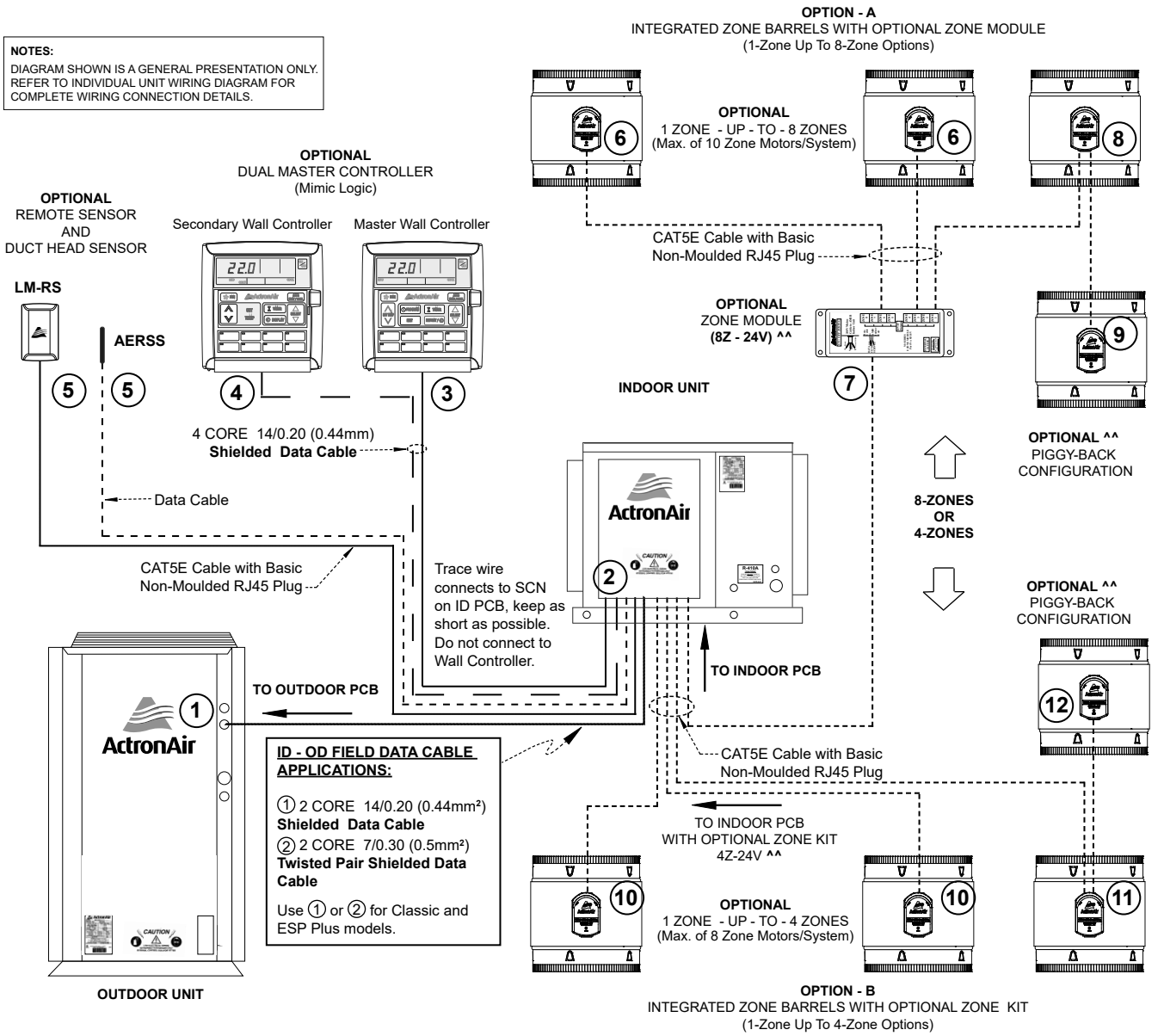

ITEM	DESCRIPTION	MAXIMUM CABLE LENGTH * ^
1 to 2	Outdoor PCB to Indoor PCB	60 m
2 to 3	Indoor PCB to Master Controller	40m
2 to 4	Indoor PCB to Secondary Wall Controller	40m (Including 2 to 3) See Note Below
2 to 5	Indoor PCB to Remote Sensor (Max. of 2 Optional Sensors)	50 m each
2 to 7	Indoor PCB to Zone Module (not applicable to Ultima Models)	50 m
2 to 9	Maximum Cumulative Cable Length** (per zone - 8 zone), i.e. 2 to 9	100 m
2 to 10	Indoor PCB to Zone Barrels 10	100 m
2 to 12	Maximum Cumulative Cable Length** (per zone - 4 zone), i.e. 2 to 12	100 m
3 to 4	Master Wall Controller to Secondary Wall Controller	20 m
6 to 7	Integrated Zone Barrel 6 to Zone Module ***	50 m
8 to 9	Zone Barrel 8 to Zone Barrel 9 (Piggy-Back) ****	95 m
11 to 12	Zone Barrel 11 to Zone Barrel 12 (Piggy-Back) ****	95 m

* **Suggested Maximum Cable Length**
Long runs beside Mains cables or TV antenna cables should be avoided where possible.

** Maximum Cumulative Cable Length per individual zone must not exceed 100 m per zone.
For Example, 2 to 9 (Optional 8 Zones Piggy-Back Configuration), if 2 to 7 is 25m, 7 to 8 is 25m, then 8 to 9 must be 50m to make a total of 100m.
2 to 12 (Optional 4 Zones Piggy-Back Configuration), if 2 to 11 is 75m, then 11 to 12 must be 25m to make a total of 100m.

*** Recommended maximum cable length, provided total of preceding and subsequent cable connections are only 5m.

**** Recommended maximum cable length, provided total of preceding cable connections are less than 5m.

^ **Total Cumulative length of all the aggregate cable must not exceed 500 meters**. Consult ActronAir for longer cable length requirement.

^^ Total of 8 Zone Barrels are allowed with 4Z-24V zone controllers, 10 Zone Barrels are allowed for 8Z-24V, and a maximum of 4 Zone Barrels are allowed per individual zone.

NOTE: Total Cumulative Cable Length with Dual Controller must not exceed 40 meters. For example, if 2 to 3 is 30m then 2 to 4 must not exceed 10m.

REFRIGERANT CHARGING

⚠ IMPORTANT

- **The units detailed on this guide are pre-charged with R-410A refrigerant**. Should there be need to add or remove some refrigerant, it is recommended to follow the charging method explained below.
- Where crankcase heaters are in operation, ensure to power up the unit for a minimum of 3 hours prior to starting the compressor. For colder climates a longer time period may be required.
- Never allow R-410A refrigerant to vent into the atmosphere. It is an offence to release refrigerant in Australia. Always reclaim refrigerant using equipment and container dedicated for R-410A system use only.
- All work must be carried out in accordance with Australia and New Zealand refrigerant handling code of practice.
- Only qualified technicians are allowed to perform any work described in this guide and specifically work related to addition or removal of refrigerant.
- If the ambient temperature is below 25°C, ensure that the system is connected to power supply (stand by) for at least six hours prior to charging. This is to ensure that the internal crankcase heater is operating to avoid any liquid going into the compressor that may cause damage. If the ambient temperature is more than 25°C, charging is allowed right away.
- R-410A refrigerant must always be charged in liquid state.
- The system can be charged through the suction service port on the compressor suction line. But be careful not to charge too much refrigerant at once, let the liquid enter in short bursts by opening and closing your gauges.
- Changes in refrigerant charge must be noted to a label that is fixed to the unit for future reference.
- Make sure to use weighing scale for accurate measurements when adding or removing refrigerant charge.

⚠ CAUTION

The system of this unit operates with POE oil that rapidly absorbs moisture.
The maximum time any system can be opened to atmosphere is 15 minutes.

REFRIGERANT CHARGE DETAILS (R-410A)

Model	Refrigerant Charge (grams)	Pre-charged Length (m)	Additional Refrigerant per m
SRE091C	3175 (1)	0	50
SRA101C	4175	10	50
SRA131C SRC131C	5450	15	50
SRA133C	5250	15	50
SRA151C SRC151C	4650	15	50
SRA153C	4650	15	50
SRA171C SRC171C	6650	15	50
SRA173C SRC173C	7350	15	50
SRA203C SRC203C	7450	15	50 (2)/100
SRA233C SRC233C	7600	10	100
SRA260C	10100	10	100

NOTE:
(1) **SRE091C is NOT** pre-charged with refrigerant. ADD base charge of 3175 grams in the field, this excludes addtional refrigerant charge for the field pipe length more than 10m. Additional 50grams per meter of pipe length is required.
(2) 50grams per meter is only applicable if 3/8” liquid field pipe is used (for field pipe length between 0-20m).

ActronAir is constantly seeking ways to improve the design of it’s products, therefore specifications are subject to change without notice.
Copyright © 2017 Actron Engineering Pty. Ltd.

REFRIGERANT CHARGING

SUBCOOLING AND SUPERHEAT CHARGING METHOD

Parameters:

LLT = Liquid Line Temperature
SCT = Saturated Condensing Temperature
SLT = Suction Line Temperature
SST = Saturated Suction Temperature

Cooling and Heating Operation:

Adjust the refrigerant charge to obtain the correct super heat and sub-cool for optimal performance as follows:

1. Ensure that air filters are fitted and total system airflow is achieved.
   (Air filters are not supplied with the unit, it is the responsibility of the installing contractor to provide and fit adequate return air and fresh air filters).

2. Connect service gauges to the schrader valves.

3. Start the unit in cool mode ensuring that compressor is in operation before taking service gauges reading. Allow the system to stabilize for next 15-30 minutes before recording.

Record the discharge pressure, suction pressure, liquid line temperature and suction line temperature for all of the refrigeration circuits:

Discharge Pressure = _____ kPa Suction Pressure = _____ kPa

Liquid Line Temperature **(LLT)** = _____ °C Suction Line Temperature **(SLT)** = _____ °C

NOTES:

1. Accurate pressure and temperature measuring tools should be used to achieve satisfactory results.
2. The sensor of a thermocouple must be in good contact with the area being measured and must be insulated in order to obtain correct reading.

See Diagram Below:

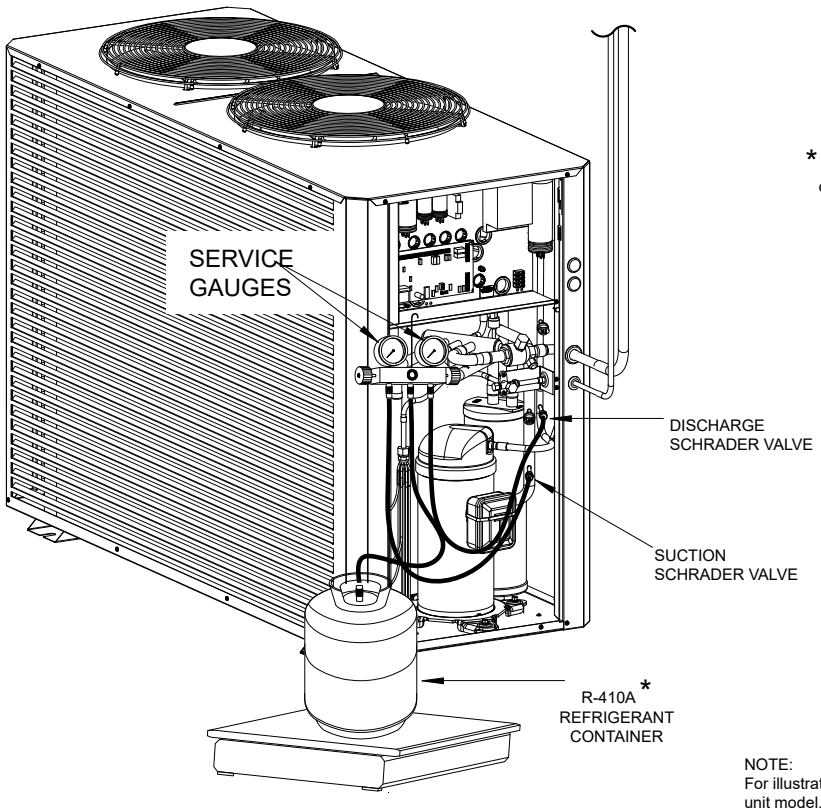

* Use weighing scale when adding or removing refrigerant charge.

NOTE:
For illustration purpose only. Valve location may vary depending on unit model.

REFRIGERANT CHARGING

Checking for Subcooling:

1. From the R-410A Pressure/Temperature Chart record the corresponding Saturated Condensing Temperature **(SCT)** at the given discharge pressure.
2. Calculate the system subcooling using the formula below:

   Subcooling = SCT - LLT
3. If subcooling is within the range (see charging table below), there is no need to add/remove refrigerant.
   - If subcooling is lower than minimum, the system is undercharged, it is necessary to add refrigerant.
   - If subcooling is higher than maximum, the system is over charged . It is necessary to remove refrigerant.

Allow the systems to stabilise (15-30 mins) and repeat the step 1-3 until subcooling falls within the range specified in the table below.

Checking for Superheat:

Maintaining the correct superheat is important for ensuring the evaporator is achieving maximum capacity and avoiding excessive liquid refrigerant returning to the compressor.

1. From the R-410A Pressure/Temperature Chart record the corresponding Saturated Suction Temperature **(SST)** at the given suction pressure.
2. Calculate the system super heat using the formula below:

   Superheat = SLT -SST
3. If superheat is within the range (see charging table below), there is no need to add/remove refrigerant.
   - If superheat is lower than minimum, it means that liquid refrigerant may be returning to compressor. It is necessary to remove refrigerant.
   - If superheat is higher than maximum, it means that refrigeration capability of evaporator is not fully maximised. it is necessary to add refrigerant charge.

Allow the systems to stabilise (15-30 mins) and repeat the step 1-3 until superheat falls within the range specified in the table below.

Model	COOLING		HEATING	
	SUB-COOL	SUPERHEAT	SUB-COOL	SUPERHEAT
Classic	4 - 8	2 - 8	10 - 14	2 - 8

NOTE: The above sub-cool and superheat recommendations are based on the following rated conditions:

- Cooling: 35°C DB outdoor, air entering indoor at 27°C DB / 19°C WB.
- Heating: 7°C DB / 6°C WB outdoor, air entering indoor at 20°C DB Nominal indoor airflow.

ActronAir is constantly seeking ways to improve the design of it's products, therefore specifications are subject to change without notice.
Copyright © 2017 Actron Engineering Pty. Ltd.

REFRIGERANT CHARGING

R-410A PRESSURE / TEMPERATURE CHART							
Temp °C	Pressure kPa	Temp °C	Pressure kPa	Temp °C	Pressure kPa	Temp °C	Pressure kPa
-60	-34.4	-28	194.9	4	805.9	36	2090.7
-59	-30.7	-27	206.9	5	834.1	37	2145.5
-58	-26.8	-26	219.2	6	862.9	38	2201.3
-57	-22.8	-25	231.9	7	892.6	39	2258.2
-56	-18.6	-24	245.1	8	922.8	40	2316.1
-55	-14.2	-23	258.7	9	953.8	41	2375.1
-54	-9.6	-22	272.6	10	985.4	42	2435.1
-53	-4.8	-21	286.9	11	1017.8	43	2496.2
-52	0.8	-20	301.7	12	1050.9	44	2558.5
-51	5.3	-19	316.9	13	1084.7	45	2621.8
-50	10.7	-18	332.6	14	1119.2	46	2686.2
-49	16.3	-17	348.7	15	1154.6	47	2751.8
-48	22.2	-16	365.2	16	1190.7	48	2818.5
-47	28.2	-15	382.3	17	1227.5	49	2886.4
-46	34.0	-14	399.7	18	1265.2	50	2955.5
-45	40.9	-13	417.7	19	1303.6	51	3025.7
-44	47.8	-12	436.2	20	1342.9	52	3097.2
-43	54.8	-11	455.1	21	1382.9	53	3169.9
-42	62.1	-10	474.6	22	1423.9	54	3243.7
-41	69.6	-9	494.6	23	1465.7	55	3318.9
-40	77.4	-8	515.1	24	1508.3	56	3395.2
-39	85.5	-7	536.2	25	1551.8	57	3472.9
-38	93.9	-6	557.8	26	1596.2	58	3551.8
-37	102.5	-5	579.8	27	1641.4	59	3631.9
-36	111.5	-4	602.6	28	1687.6	60	3713.5
-35	120.8	-3	625.9	29	1734.6	61	3796.3
-34	130.4	-2	649.8	30	1782.6	62	3880.5
-33	140.3	-1	674.3	31	1831.6	63	3965.9
-32	150.5	0	699.4	32	1881.5	64	4052.8
-31	161.1	1	724.9	33	1932.3	65	4140.9
-30	171.9	2	751.3	34	1984.1	66	4230.6
-29	183.3	3	778.3	35	2036.9	67	4321.5

MAINTENANCE

Maintenance Procedures
This section describes the procedures that must be performed as a part of normal maintenance program. Regular servicing of equipment by licensed technician is highly recommended. Always disconnect electrical power to the unit before performing these procedures. It is always a safe practice to observe all safety warnings and cautions when conducting maintenance tasks.

DANGER

Live Electrical Connections !
It may be necessary to work with live electrical components on certain maintenance tasks. Only qualified technicians are allowed to perform these tasks.

WARNING

Hazardous Voltage !
Always make sure that all power supply, including remote controls, are disconnected before performing maintenance. Observe proper Lock-Out / Tag-Out procedures to ensure that power cannot be inadvertently energised. Failure to disconnect power before maintenance procedures can result in serious injury and/or death.

Annual Maintenance Checklists
- Perform general maintenance inspections.
- Perform scheduled start-up checks.
- Leak test refrigerant circuits.
- Inspect contacts of all contactors and relays. Replace all worn contacts as required.
- Inspect, clean and tighten all electrical connections.
- Check fans for balanced operation. Make sure that there are no loose screws / bolts, no fan blades interference and no damage to the fans and guards.
- Inspect the air filters, clean or replace as required.
- Clean and repaint any corroded panel section.
- Ensure no blockage of airflow through variable speed drive and drive fan is operating correctly.

Cleaning the Condenser Coils
Clean the coils at least once a year or more frequently if unit is located in a dusty and dirty environment, in order to maintain your system's proper operating performance. High discharge pressures are good indication that the coils need cleaning. When using detergent or solvents to clean the coils, follow the manufacturer's instructions to avoid potential damage to the coils and to the unit.

To clean the refrigerant coils, use a soft brush and water spray, such as garden hose or pressure washer with low pressure nozzle.

DANGER

Beware of Rotating Fan Blades !
Always make sure that all power supply, to the Outdoor Fans are turn-off and isolated.

Observe WH&S safety procedures, do not wear loose clothing and any jewellery when working near the fans.

Wear PPE whenever performing any maintenance procedures.

Observe all necessary procedures when working on a confined space.

CAUTION

Do Not Use High Alkaline Detergent!
When using detergent for coil cleaning, ensure that the alkaline level is no higher than 8.5, which can cause corrosion damage to the coils.

Coil Cleaning Procedures
- Disconnect power to the unit.
- Remove the louvered panels from the unit to gain access to the air inlet side of the coils.
- Use a soft brush to remove loose dirt and debris from both sides of the coils.
- Straighten bent coil fins with fin comb.
- Prepare the detergent solutions according to the manufacturer's instructions.
- Spray solution at a 90° angle to the coils, keeping a minimum nozzle spray angle of 15°, with at least a 1800mm distance from the coils and 600 psi pressure.
- Spray leaving air side of the coils first then the air inlet side. Allow the solution to stand on the coils for five minutes.
- Rinse both sides of the coils with cool clean water.
- Inspect the coils, if they are still dirty, repeat the cleaning procedure.
- Clean and wipe dry the outer and inner sides of the unit, the refrigerating parts and other components.
- Ensure that the condensate drain lines are not blocked.
- Reinstall all unit panels, covers and guards.
- Restore electrical power to the unit.

CAUTION

Be Careful Not to Spray Water into the Electical Components !

ActronAir is constantly seeking ways to improve the design of it's products, therefore specifications are subject to change without notice.
Copyright © 2017 Actron Engineering Pty. Ltd.

MAINTENANCE FREQUENCY CHECKLIST

Electrical

Parts	Service Period								Detail of Service Check	Service Methods
	1 Mth	3 Mth	6 Mth	1 Yr	2 Yrs	3 Yrs	4 Yrs	5 Yrs		
Printed Circuit Boards				✓					Visual Inspection	Tighten Terminals as necessary on printed circuit boards
Electrical Connections				✓					Check all electrical terminals, mains, communications, etc	Re-tighten if loose.
Magnetic Contactor				✓					Check for loose terminal connections.	Tighten electrical terminals. Remove any dust.

Indoor Unit

Parts	Service Period								Detail of Service Check	Service Methods
	1 Mth	3 Mth	6 Mth	1 Yr	2 Yrs	3 Yrs	4 Yrs	5 Yrs		
Casing / Panels and Frames				✓					Visual check for damage, rust and dust accumulation.	For highly corrosive environment, wash panels quarterly with water and neutral detergent solution. Wax panels. Repair / re-paint where required.
Insulation				✓					Visual check for insulation conditions.	Repair / replace insulation material.
Fan				✓					Visual check for run out of balance and dust attached	Clean off dust as necessary to negate possibility of fan running out of balance
Motor				✓ Ω					Visual check on wiring. Insulation resistance check to be carried out annually	Measure insulation resistance. Should be more than 1MΩ
Heat Exchanger				✓					Check for clogging by dust. Check for leaks / damage.	Clean air inlet side as necessary. Straighten any bent fins using fins comb.
Drain Pan/ Condensation line				✓					Check for obstructions and free flow of water	Clean to eliminate obstructions/ sludge and check condition of pan. Pour water to ensure free flow.
Filter				✓					Check for clogging by dust.	Clean Filter
Temperature Readings				✓					Measure air on and air off	Place temperature probe in return and supply air of unit.
Zone Motors				✓					Visual inspection of motors open/housing. Ensure no obstructions	Drive motors opened and closed. Ensure correct operation.
Duct Works				✓					Inspect duct works for air gaps.	Re-tape any loose ducts.

MAINTENANCE FREQUENCY CHECKLIST

Outdoor Unit

Parts	Service Period								Detail of Service Check	Service Methods
	1 Mth	3 Mth	6 Mth	1 Yr	2 Yrs	3 Yrs	4 Yrs	5 Yrs		
Casing / Panels and Frames				✓					Visual check for damage, rust and dust accumulation.	For highly corrosive environment, wash panels quarterly with water and neutral detergent solution. Wax panels. Repair / re-paint where required.
Insulation				✓					Visual check for insulation conditions.	Repair / replace insulation material.
Fan				✓					Visual check for run out of balance and dust attached	Clean off dust as necessary to negate possibility of fan running out of balance
Motor				✓ Ω					Visual check on wiring. Insulation resistance check to be carried out annually	Measure insulation resistance. Should be more than 1MΩ
Heat Exchanger				✓					Check for clogging by dust. Check for leaks / damage.	Clean air inlet side as necessary. Straighten any bent fins using fins comb.
Condensate Drain Line (if available)				✓					Check for obstructions and free flow of water	Clean to eliminate obstructions/ sludge and check condition of drain line. Pour water to ensure free flow.
Compressor				✓ Ω					Check for high / low pressure. Measure insulation resistance. Check compressor for abnormal noise/vibrations	Measure insulation resistance. Should be more than 1MΩ.
Refrigeration Operational Readings				✓					Make note of operational reading in test cool/heat	Check operating pressures, record super heat and sub-cool values
Safety Devices				✓					Check calibration of safety devices such as HP and LP controls, sensors, etc	Check resistance of sensors, pressure cut in / cut out of pressure controls
Faults				✓					Check for any previous fault history on unit.	Investigate any causes for previous faults, reset fault history.

⚠ NOTES

Checklist and service periods are provided as a guide only, some sites may require more frequent servicing.

Service period for filter cleaning may vary depending on operating time and surrounding environment.

ActronAir is constantly seeking ways to improve the design of it's products, therefore specifications are subject to change without notice.
Copyright © 2017 Actron Engineering Pty. Ltd.

TROUBLESHOOTING GUIDE

Fault	Possible Causes	Remedies
The system does not start.	Built-in safety timers have been activated	Ensure that 5 minutes has passed from turn on time.
	A breaker has turned OFF or a fuse has blown.	Check breakers and fuses.
	The thermostat set point is incorrect.	Check master wall control settings are correct. Check the thermostat “set-point” is set low enough for cooling or high enough for heating.
	The master wall controller timer setting is incorrect.	Check the master wall controller timer settings. See Operating Instructions section.
Air does not flow (Indoor unit)	Zones might be switched off.	Check zones are switched on.
	During heating operation, the hot start function may have been activated.	During heating operation the indoor fan is delayed for 46 seconds or until the indoor coil reaches 24°C (whichever occurs first). This is to prevent cold drafts. Wait 46 seconds and the air will start flowing.
	During defrost of the outdoor coil in heating operation; the indoor fan will not operate for several minutes. (“HEAT” LED flashes on master wall control).	This is normal operation during the defrost cycle to prevent cold air being blown into rooms.
Cooling/Heating is not sufficient.	The cooling/heating function may not work effectively when the return air filter is clogged with dust and dirt.	Clean the return air filter.
	The cooling/heating function may not work effectively if the air inlet and air outlet on the outdoor unit are blocked.	Make sure the air inlet and air outlet on the outdoor unit is not blocked. Check that the area around the outdoor unit is free from obstructions that may cause the airflow to recirculate.
	The airflow across the indoor coil may not be enough and the anti-freeze protection or over heat prevention systems can lower the cycle capacity for the unit.	Reduce the total static pressure on the indoor fan to increase airflow. For example increase duct sizes, reduce tight duct work bends or increase return air grille size.
	The cool/heat load is too great for the air conditioner.	Perform a heat load analysis on the conditioned space. You may need to consider upgrading your air conditioner with a larger system.
	Open windows or doors will cause inefficient operation.	Close windows and doors in conditioned areas.
	Appropriate zones not turned on.	Turn on appropriate zones (if applicable)
	The outside temperature is beyond the air conditioner design conditions.	If you know a extreme day is coming turn the air conditioner on a few hours before ambient temperatures reach extreme. This should help on those few extreme days.
Steam emitted from outdoor unit.	This is caused by the defrosting operation of the outdoor units heat exchanger in heating operation in cold ambient conditions.	This is normal during the defrost operation in cold ambient conditions.
Water emitted from outdoor unit.	Condensation of water on the outdoor coil during heating operation.	This is normal during heating operation. You can purchase drip trays to contain then drain this excess water.

TROUBLE SHOOTING GUIDE

Fault	Possible Causes	Remedies
Set temperature cannot be adjusted.	The zone control set temperature limits are being exceeded.	Check the upper and lower temperature limits are set correctly. See operation manual for details on setting upper and lower temperature limits.
Occasional wishing noise can be heard on heating cycle.	This is the sound of the gas changing directions as de-ice cycle begins.	This is a normal function of an air conditioner. The unit is removing any ice on the outdoor unit.
The compressor is running but the system is not cooling.	You are in heating mode.	Check the temperature settings.
	The reversing valve has jammed between heating and cooling.	Replace reversing valve.
The outdoor coil keeps freezing over.	Outdoor coil sensor might be faulty. See sensor (temperature/ resistance) table and check resistance value.	Replace faulty sensor.
	May have obstruction in outdoor coil.	Remove obstructions.
There is only one condenser fan working.	The fan is faulty. Test the fan motor for correct voltage, check the motor winding resistance, open circuit, check capacitor, etc.	Replace faulty fan. If the fan motor needs to be replaced and there isn't one available immediately, then just disconnect the fan electrically and cover the faulty motors fan guard. This way the unit can still operate at reduced capacity using 1 fan until you get a replacement fan motor.
The indoor unit gives out odour.	This happens when smell of the room, furniture, or cigarettes are absorbed into the unit and discharged with the airflow.	If this happens, we recommend you to run the air conditioner on cooling for a period of time with the doors and windows open or have the indoor unit washed by a technician. Consult the installer from whom you bought the air conditioner.
	Check the drain is not piped into the sewerage drain line.	Re-pipe drain with a P-Trap and connect into household drainage or storm water drain.

ActronAir is constantly seeking ways to improve the design of it's products, therefore specifications are subject to change without notice.
Copyright © 2017 Actron Engineering Pty. Ltd.

STATUS AND FAULT CODES

FAULT AND STATUS CODES

FAULT / FUNCTION CODES			
OUTDOOR CPU	**LM7 Wall Control (Part # LM7)**	**LM24 Wall Control (Part # LM24W)**	**FUNCTION / FAULT**
0	-	-	Cooling Mode
	COOL and LOW blink 30s	COOL and LOW blink 30s	Anti-Freeze Protection Mode (Low Capacity Mode)
1	-	-	Heating Mode
	HEAT and HIGH blink 30s	HEAT and HIGH blink 30s	Overheat Safety Protection
2	-	-	Heating Mode - Compressor run time > 20 min
5	HEAT blink every 8 s	HEAT blink every 8 s	Heating Mode - indoor coil pre-heat after defrost
6	E6	E6	Fault discharge high temperature (low on refrigerant)
7	E7	E7	Fault outdoor coil sensor (open or short circuit)
9	E9	E9	High or Low Pressure / Phase Error (3 Phase models only)
n/a	E5	E5	Communication error between outdoor and indoor
n/a	E3	E3	Fault room sensor(s) (open or short circuit)
n/a	E4	E4	Fault indoor coil-in sensor (open or short circuit)

NOTES:

1. When unit is powered up, the first No. shown on LED display will be the CPU version No., then 8 followed by normal controller status codes.
2. Faults may not be displayed on the wall control until the fault occurs several times.
3. Phase error will be indicated by indicator lights on the 3 phase sequence relay.
4. Phase correction must be applied to the incoming supply side.

STANDARD (CLASSICS) UNIT

DESCRIPTION	PART NUMBER	SRE091C	SRA101C	SRA131C SRC131C	SRA133C	SRA151C SRC151C	SRA153C	SRA171C SRC171C	SRA173C SRC173C	SRA203C SRC203C	SRA233C SRC233C	SRA260C
Compressor	1560-458	1	---	---	---	---	---	---	---	---	---	---
	1560-445	---	1	---	---	---	---	---	---	---	---	---
	1560-455	---	---	1	---	---	---	---	---	---	---	---
	1560-446	---	---	---	1	---	---	---	---	---	---	---
	1560-453	---	---	---	---	1	---	---	---	---	---	---
	1560-463	---	---	---	---	---	1	---	---	---	---	---
	1560-452	---	---	---	---	---	---	1	---	---	---	---
	1560-463	---	---	---	---	---	---	---	1	---	---	---
	1560-462	---	---	---	---	---	---	---	---	1	---	---
	1560-471	---	---	---	---	---	---	---	---	---	1	---
	1560-436	---	---	---	---	---	---	---	---	---	---	1
Outdoor Fan	2505-109	1	---	2	2	2	2	2	2	2	---	---
	2505-110	---	2	---	---	---	---	---	---	---	---	---
	2505-130	---	2	---	---	---	---	---	---	---	2	2
Outdoor Control Board	2020-105	1	1	1	1	1	1	1	1	1	1	---
	2020-097	---	-	---	---	---	---	---	---	---	---	1
Metering Device - (0.512”) Piston	4540-051	1	---	---	---	---	---	---	---	---	---	---
Metering Device - (0.550”) Piston	4540-055	---	1	---	---	---	---	---	---	---	---	---
Metering Device - (0.591”) Piston	4540-059	---	---	1	1	---	---	---	---	---	---	---
Metering Device - (0.689”) Piston	4540-068	---	---	---	---	1	1	---	---	---	---	---
Metering Device - (0.748”) Piston	4540-074	---	---	---	---	---	---	1	1	---	---	---
Metering Device - (0.760”) Piston	4540-076	---	---	---	---	---	---	---	---	1	---	---
Metering Device - (0.610”) Piston	4540-061	---	---	---	---	---	---	---	---	---	2	2

ActronAir is constantly seeking ways to improve the design of it's products, therefore specifications are subject to change without notice.
Copyright © 2017 Actron Engineering Pty. Ltd.

START UP AND COMMISSIONING REPORT

INSTALLATION INFORMATION

CUSTOMER	Name:	Tel. Number:
	Address:	
INSTALLER	Name:	Tel. Number:
	Address:	
Site Address:		Date Installed:

Model:	Serial Number:

CIRCUIT TEMPERATURE SETTINGS

Supply Air Temperature		°C
Return Air Temperature		°C
Suction Temperature		°C
Discharge Temperature		°C
Condenser Coil Temperature		°C
Ambient Temperature		°C

INDOOR FAN SETTINGS		OUTDOOR FAN SETTINGS	
Indoor Fan Current	Amps	Outdoor Fan Current	Amps
Indoor Fan Airflow	l/s		
Set Static	Pa		

Check No Active Error Codes on the Unit	Checked:	☐	Date Checked:	

Ensure to record operational settings on this table for future reference.
Keep this manual in a safe place and readily available for service technicians.

THIS PAGE WAS INTENTIONALLY LEFT BLANK

THIS PAGE WAS INTENTIONALLY LEFT BLANK

THIS PAGE WAS INTENTIONALLY LEFT BLANK

ActronAir is constantly seeking ways to improve the design of it's products, therefore specifications are subject to change without notice.
Copyright © 2017 Actron Engineering Pty. Ltd.

ActronAir®

1800 119 229
www.actronair.com.au

Actron Engineering Pty Ltd
ABN 34 002 767 240
HEAD OFFICE SYDNEY AUSTRALIA
Copyright © 2017 Actron Engineering Pty. Ltd.

Printed in Australia
Part No. 0525-039
Ver. 7 01/20