TECHNICAL SELECTION DATA | URC-100AS / CRE-100AS

CASSETTE SPLIT SYSTEM

1 Phase | 1 Stage | 10.50 kW

UNIT FEATURES

- Reverse Cycle 4-Way Cassette Split System
- Twin-Rotary Compressor
- Superior Operating Range:
  - Cooling: up to 50°C DB
  - Heating: down to -25°C DB
- Adjustable Airflow
- 360° Airflow Direction
- Independent Louvre Control
- Louvre Position Memory
- Fan Speed: Auto, Low, Medium and High
- Powder Coated Panels - Outdoor Unit
- Hydrophilic Indoor and Outdoor Coil Protection
- Self-Diagnosis and Auto Protection
- Fire Proof Electrical Box - Indoor & Outdoor
- Drain Pump
- Hanging Brackets

UNIT OPTION

- Twin System Operation
- Supply Air Ports
- Outside Air Intake

CONTROL FEATURES

- WC-02 Wired Controller
- 7-Day Scheduler/Weekly Timer
- Digital Display
- Auto Restart After Power Failure
- Timer Operation
- Remote ON/OFF Input.
- Manual ON/OFF Operation
- 4-Speed Indoor Fan
- 5-Speed Outdoor Fan
- Sleep Mode
- Turbo Mode
- Quiet Mode
- Dry Mode Operation
- Demand Response Ready
- Auto Defrost Function
- Follow Me Function
- Fault Alarm Output

UNIT COMPLIANCE

- MEPS 2012
- Demand Response AS4755.3.1

SPECIFICATION SUMMARY

OUTDOOR UNIT MODEL	URC-100AS
INDOOR UNIT MODEL	CRE-100AS

		NETT
(1)(2) COOLING CAPACITY (kW) - NOMINAL (MIN - MAX)		10.50 (4.20 - 12.60)
(1) (3) HEATING CAPACITY (kW) - NOMINAL (MIN - MAX)		10.70 (4.32 - 12.95)
(1) (4) COOLING INPUT POWER (kW)		3.11
(1) (4) HEATING INPUT POWER (kW)		2.88
(1)(2) EER		3.38
(1)(3) COP		3.72
(5) INDOOR AIRFLOW (l/s) - LOW/MED/HIGH		361/408/444
MOISTURE REMOVAL (l/hr)		1.7
INDOOR SOUND PRESS. LEVEL dB(A) - LOW/MED/HIGH		44 / 48 / 51
OUTDOOR SOUND PRESS. LEVEL @ 1M dB(A)		62
(6) OUTDOOR SOUND POWER LEVEL dB(A)		70
POWER SUPPLY		220 - 240V / 1Ph+N / 50 Hz
INDOOR UNIT WIRING METHOD		Hard wire to Outdoor
(1) RATED LOAD AMPS - COOLING / HEATING		13.7 / 12.7
(7) FULL LOAD AMPS		21.5
(8) CIRCUIT BREAKER AND CABLE AMPS		25.0
WEIGHT (kg) - INDOOR / OUTDOOR		36 / 69
OUTDOOR OPERATING RANGE (°C)	COOLING	-15 to 50
	HEATING	-25 to 30

(1) Measured and tested in accordance with AS/NZS 3823.1.1.
(2) At 27°C DB / 19°C WB entering air temperatures and 35°C ambient.
(3) At 20°C DB entering air temperature and 7°C DB / 6°C WB ambient.
(4) input power includes indoor fan kW.
(5) Max. - Min. airflow application range.
(6) Determination of Sound Power Levels of Noise Sources per AS1217.2.
(7) Full Load Amps are based on compressor and fan motors' maximum expected current.
(8) See Specifications sheet for cable size and circuit breaker size details.

Note: Use input power to estimate running cost.

ActronAir is constantly seeking ways to improve the design of it's products, therefore specifications are subject to change without notice.
Please check prior to purchase. Copyright © 2016 Actron Engineering Pty. Ltd.

CAPACITY SELECTION DATA

URC-100AS / CRE-100AS

10.50 kW | 1 Phase | 1 Stage

COOLING PERFORMANCE

INDOOR CONDITIONS		OUTDOOR TEMPERATURE (°C - DB)						
		21	25	30	35	40	45	50
21°C - DB 15°C - WB	Nett Capacity, kW	10.22	10.03	9.86	9.38	8.95	6.56	4.69
	Sensible Heat Capacity, kW	8.40	8.25	8.11	7.71	7.36	5.39	3.85
	Power Input, kW	1.19	1.96	2.39	2.92	3.27	3.30	3.34
24°C - DB 17°C - WB	Nett Capacity, kW	10.87	10.67	10.49	9.98	9.53	6.98	4.99
	Sensible Heat Capacity, kW	8.94	8.77	8.62	8.20	7.83	5.74	4.10
	Power Input, kW	1.23	2.03	2.47	3.01	3.38	3.41	3.44
27°C - DB 19°C - WB	Nett Capacity, kW	11.45	11.24	11.05	**10.50**	10.03	7.35	5.25
	Sensible Heat Capacity, kW	9.41	9.23	9.08	**8.63**	8.24	6.04	4.32
	Power Input, kW	1.27	2.09	2.55	**3.11**	3.48	3.51	3.55
32°C - DB 23°C - WB	Nett Capacity, kW	12.82	12.58	12.37	11.76	11.23	8.23	5.88
	Sensible Heat Capacity, kW	10.54	10.34	10.17	9.67	9.23	6.77	4.83
	Power Input, kW	1.40	2.31	2.81	3.43	3.84	3.88	3.92

HEATING PERFORMANCE

INDOOR CONDITIONS		OUTDOOR TEMPERATURE							
		-15°C D -16°C W	-7°C D -8°C W	-5°C D -6°C W	0°C D -1°C W	4°C D 3°C W	7°C D 6°C W	12°C D 11°C W	24°C D 18°C W
15°C - DB	Nett Capacity, kW	4.19	7.61	8.39	9.29	9.88	11.98	13.18	11.06
	Power Input, kW	1.62	2.63	2.32	2.85	3.19	3.16	3.48	2.91
18°C - DB	Nett Capacity, kW	4.01	7.27	8.01	8.87	9.44	11.45	12.59	10.56
	Power Input, kW	1.56	2.54	2.24	2.74	3.08	3.05	3.35	2.80
20°C - DB	Nett Capacity, kW	3.75	6.79	7.49	8.29	8.82	**10.70**	11.77	9.87
	Power Input, kW	1.48	2.40	2.11	2.59	2.91	**2.88**	3.17	2.65
22°C - DB	Nett Capacity, kW	3.63	6.59	7.27	8.04	8.56	10.38	11.42	9.57
	Power Input, kW	1.51	2.45	2.16	2.65	2.97	2.94	3.23	2.71
27°C - DB	Nett Capacity, kW	3.26	5.91	6.52	7.21	7.68	9.31	10.24	8.59
	Power Input, kW	1.51	2.46	2.16	2.65	2.98	2.95	3.24	2.71

PIPE LENGTH CORRECTION MULTIPLIER

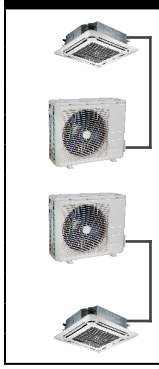

COOLING			PIPE LENGTH (m)							
			5	10	20	30	40	50	60	65
H = Height Difference (m)	Indoor Unit Higher Than Outdoor Unit	30	---	---	---	0.867	0.827	0.788	0.747	0.704
		20	---	---	0.920	0.880	0.840	0.800	0.759	0.715
		10	---	0.975	0.934	0.893	0.852	0.812	0.770	0.726
		5	0.995	0.985	0.943	0.902	0.861	0.820	0.778	0.733
		0	**1**	**0.990**	**0.948**	**0.907**	**0.865**	**0.824**	**0.782**	**0.737**
	Indoor Unit Lower Than Outdoor Unit	-5	1	0.990	0.948	0.907	0.865	0.824	0.782	0.737
		-10	---	0.990	0.948	0.907	0.865	0.824	0.782	0.737
		-20	---	---	0.948	0.907	0.865	0.824	0.782	0.737
		-30	---	---	---	0.907	0.865	0.824	0.782	0.737

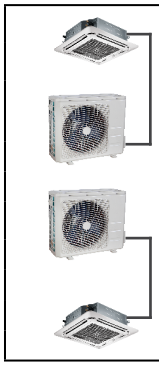

HEATING			PIPE LENGTH (m)							
			5	10	20	30	40	50	60	65
H = Height Difference (m)	Indoor Unit Higher Than Outdoor Unit	30	---	---	---	0.953	0.932	0.911	0.884	0.851
		20	---	---	0.974	0.953	0.932	0.911	0.884	0.851
		10	---	0.995	0.974	0.953	0.932	0.911	0.884	0.851
		5	1	0.995	0.974	0.953	0.932	0.911	0.884	0.851
		0	**1**	**0.995**	**0.974**	**0.953**	**0.932**	**0.911**	**0.884**	**0.851**
	Indoor Unit Lower Than Outdoor Unit	-5	0.992	0.987	0.966	0.945	0.924	0.904	0.877	0.844
		-10	---	0.979	0.958	0.938	0.917	0.896	0.869	0.837
		-20	---	---	0.951	0.930	0.910	0.889	0.863	0.831
		-30	---	---	---	0.923	0.902	0.882	0.856	0.824

ActronAir

ActronAir is constantly seeking ways to improve the design of it's products, therefore specifications are subject to change without notice.
Please check prior to purchase. Copyright © 2016 Actron Engineering Pty. Ltd.

C OUTDOOR UNIT : URC-100AS

NOMINAL DIMENSION (H x W x D)
= 810 x 946 x 410
USE M10 BOLT FOR FEET MOUNTING

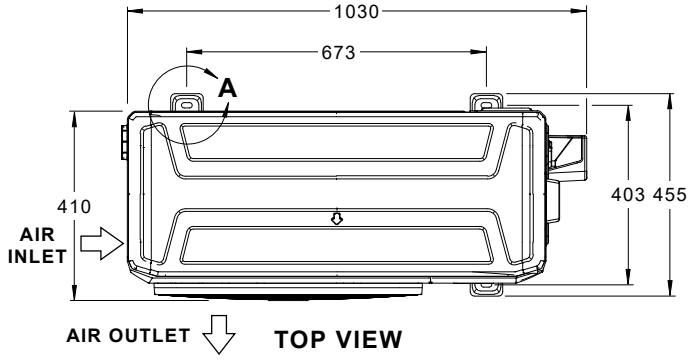

TOP VIEW

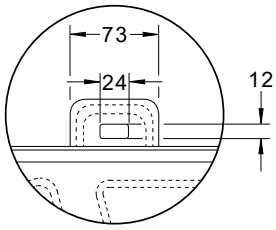

DETAIL - "A"

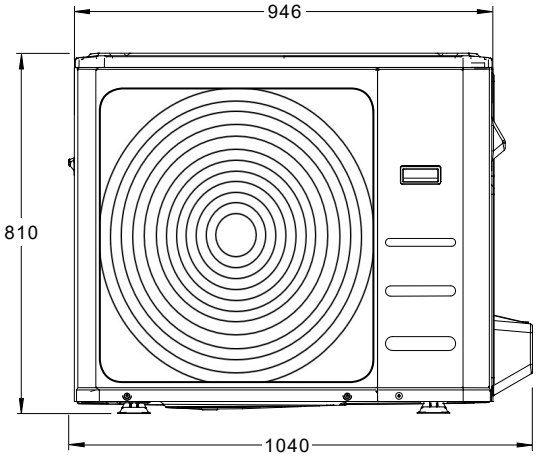

FRONT VIEW

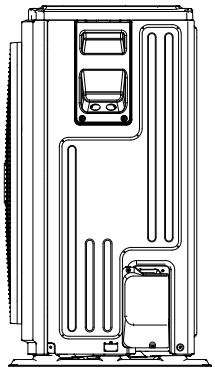

SIDE VIEW

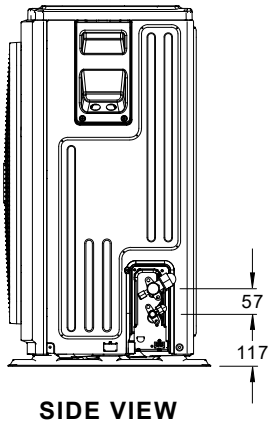

SIDE VIEW

PLEASE NOTE THAT UNDER ALL CIRCUMSTANCES, CONDENSER AIR MUST NOT RECIRCULATE BACK ONTO CONDENSER COIL.

NOTES:

THIRD ANGLE PROJECTION

1. All dimensions are in mm unless specified.
2. Do not scale drawing.
3. Refer Pipe Connection Details on Specifications Sheet.
4. Suggested Service Clearances are based on conditions that the spaces are free from obstructions and walkway passage of 1000mm is available.
5. Minimum service access areas are responsibilities of the installer.

SERVICE ACCESS AREAS & AIRFLOW ALLOWANCES

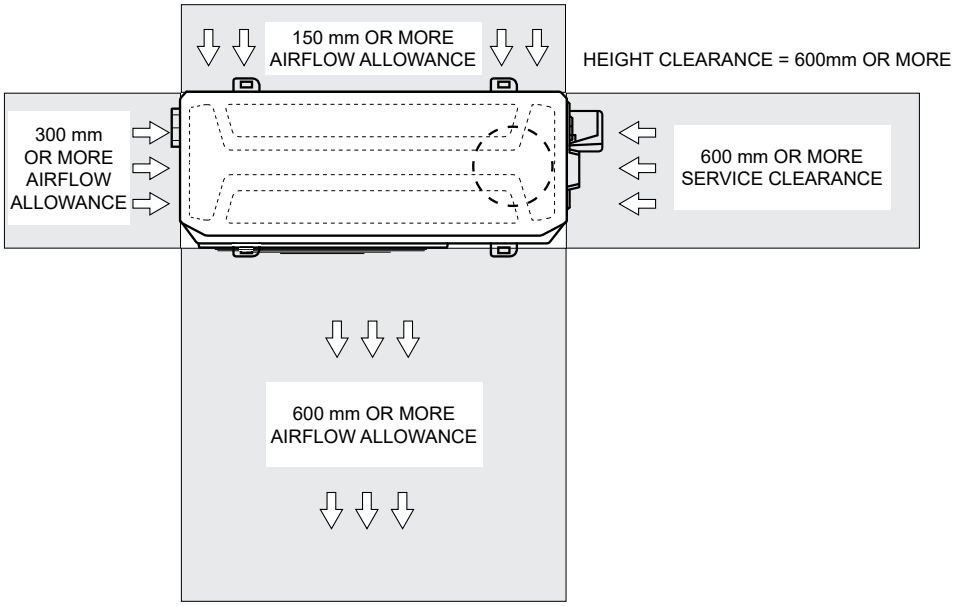

ActronAir is constantly seeking ways to improve the design of it's products, therefore specifications are subject to change without notice.
Please check prior to purchase. Copyright © 2016 Actron Engineering Pty. Ltd.

UNIT DIMENSIONS

URC-100AS / CRE-100AS

E INDOOR UNIT : CRE-100AS

OVERALL NOMINAL DIMENSION (H x W x D)
= 287 x 840 x 840
DRAIN CONNECTION = 32mm OD

NOTES:
1. All dimensions are in mm unless specified.
2. Do not scale drawing.
3. Refer Pipe Connection Details on Specifications Sheet.
4. Minimum service access areas are responsibilities of the installer.

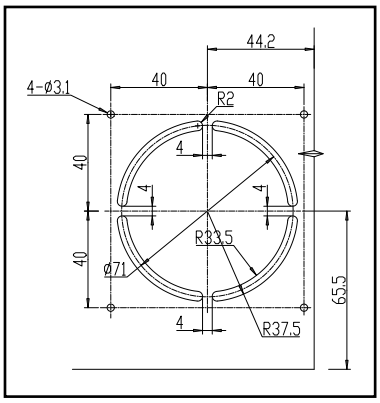

Outside Air Intake Details

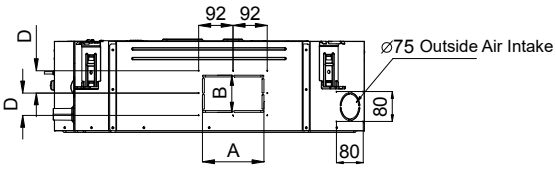

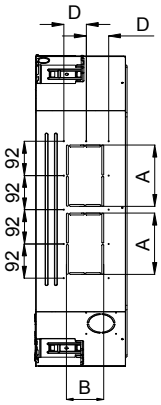

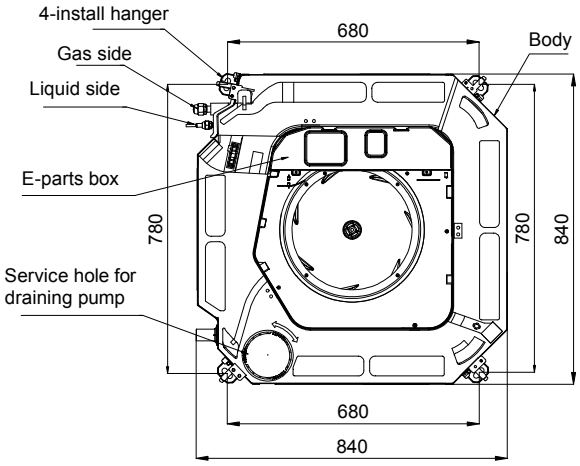

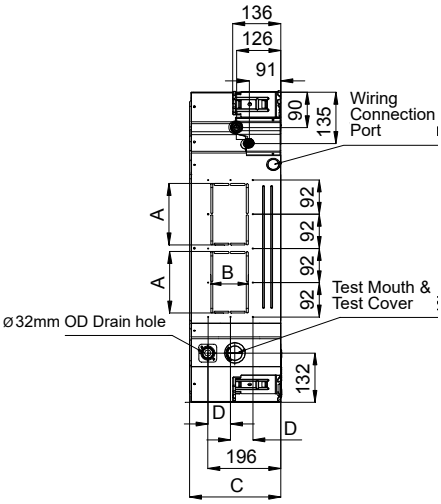

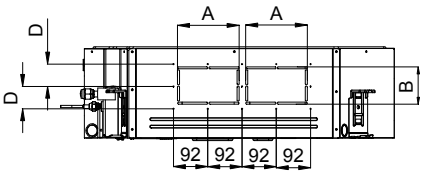

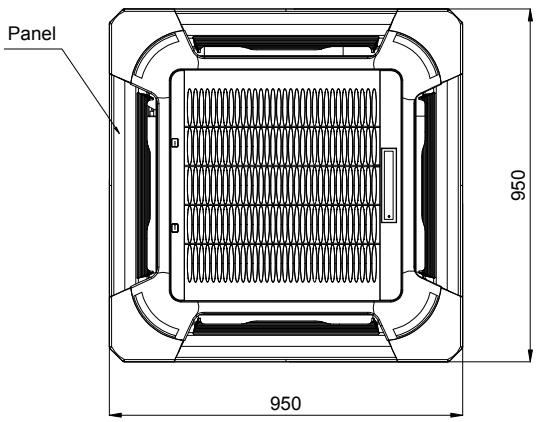

Model	Dimensions (mm)			
	A	B	C	D
URC-100AS / CRE-100AS	160	95	287	60

ActronAir is constantly seeking ways to improve the design of it's products, therefore specifications are subject to change without notice.
Please check prior to purchase. Copyright © 2016 Actron Engineering Pty. Ltd.

NOTES:
1. All dimensions are in mm unless specified.
2. Do not scale drawing.
3. Refer Pipe Connection Details on Specifications Sheet.
4. Minimum service access areas are responsibilities of the installer.

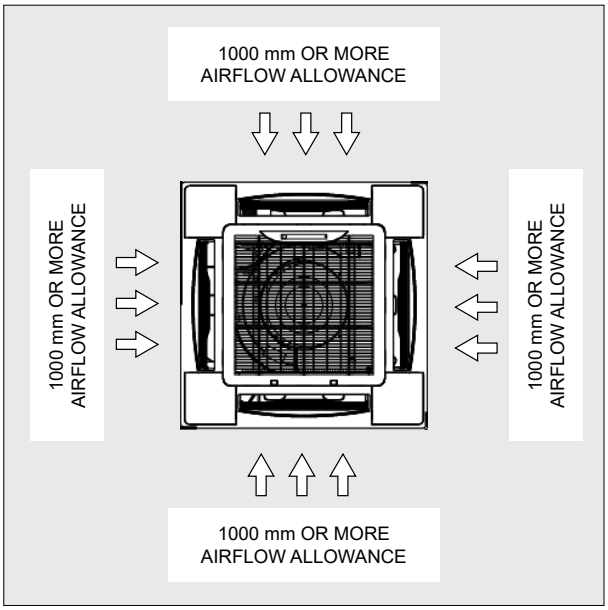

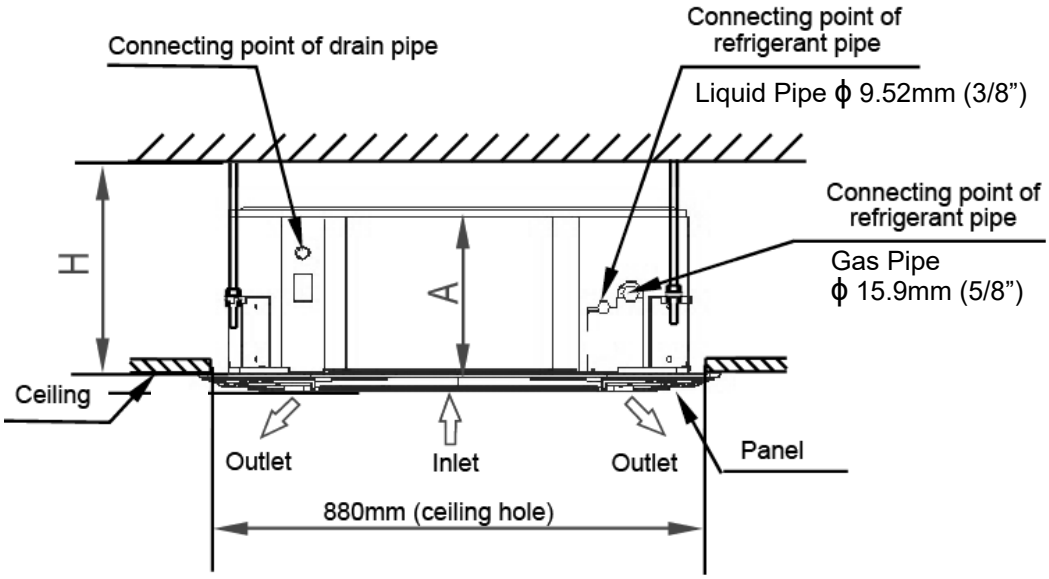

Model	Dimensions (mm)	
	A	H
URC-100AS / CRE-100AS	287	> 317

ActronAir is constantly seeking ways to improve the design of it's products, therefore specifications are subject to change without notice.
Please check prior to purchase. Copyright © 2016 Actron Engineering Pty. Ltd.

COOLING:

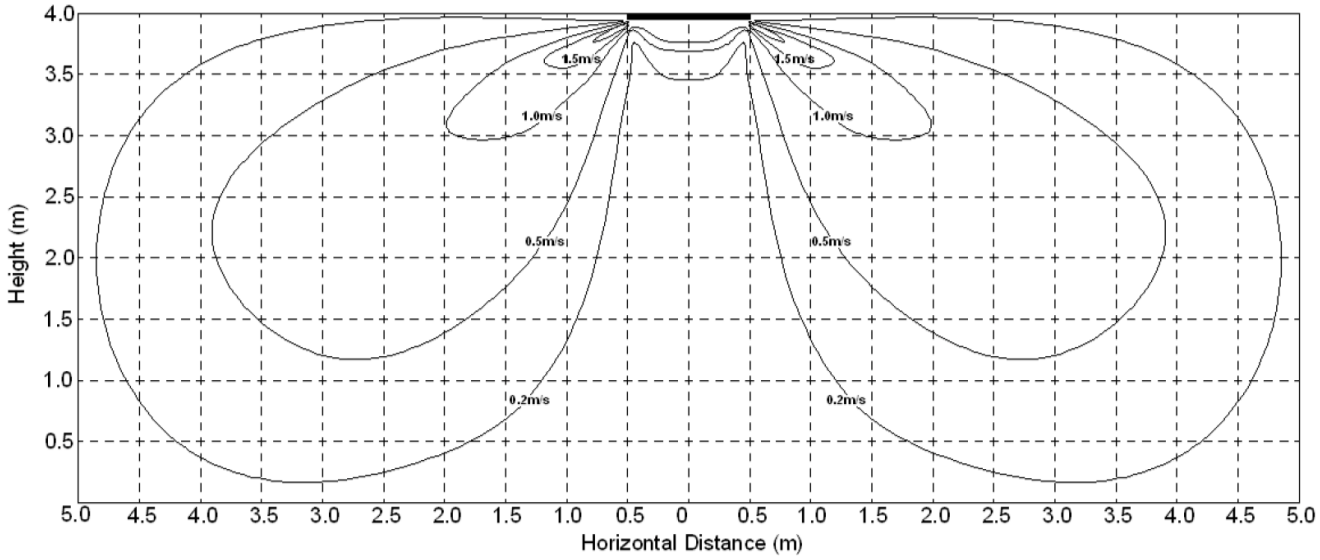

HEATING:

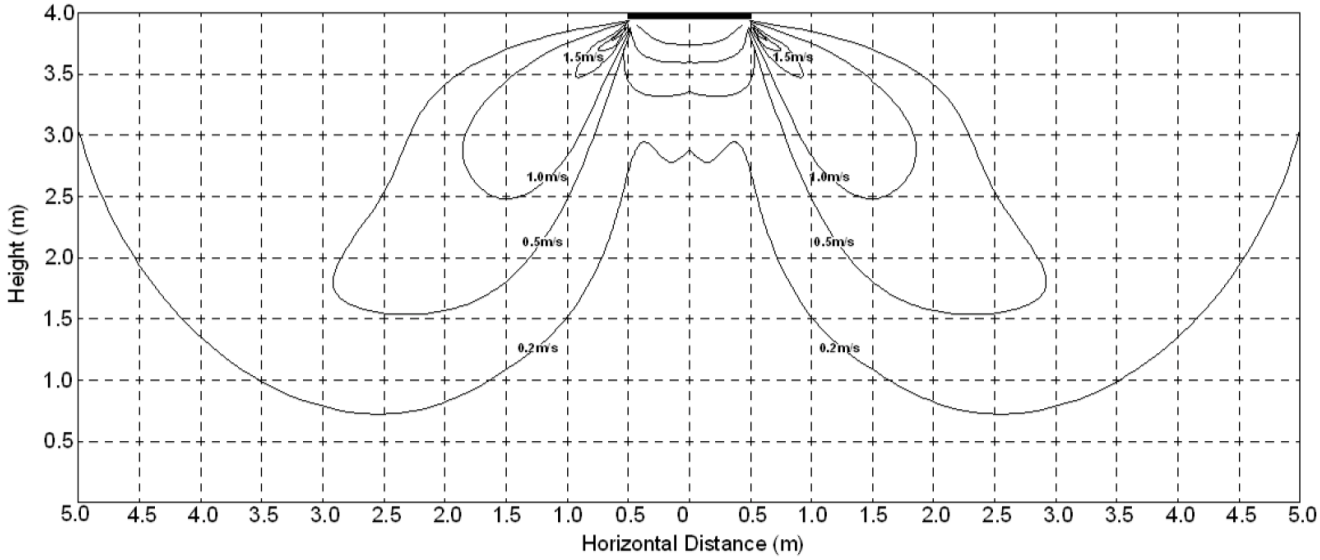

ActronAir is constantly seeking ways to improve the design of it's products, therefore specifications are subject to change without notice.
Please check prior to purchase. Copyright © 2016 Actron Engineering Pty. Ltd.

OUTDOOR UNIT : URC-100AS

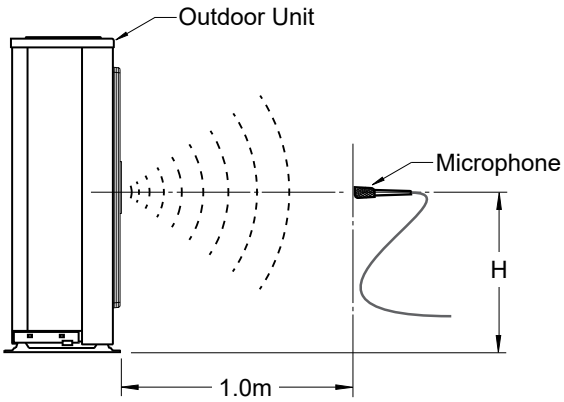

Model	Sound Pressure Level dB(A)
URC-100AS	62

NOTE: H= 0.5 x Height of Outdoor Unit.

NOTES:

- Sound measured at 1.0m away from the center of the unit.
- Data is valid at free field condition.
- Data is valid at nominal operation condition.
- Reference acoustic pressure 0dB(A) = 20μPa.
- Sound level will vary depending on a range of factors such as the construction (acoustic absorption coefficient) of particular room in which the equipment is installed.
- The operating conditions are assumed to be standard.
- The outdoor units are coupled with the indoor units of Cassettes.

INDOOR UNIT : CRE-100AS

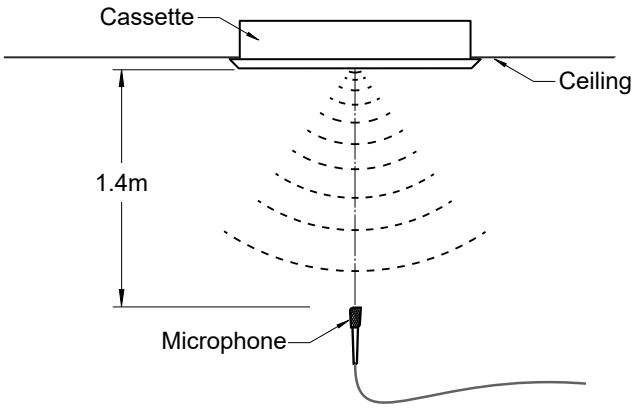

Model	Sound Pressure Level dB(A)		
	High	Medium	Low
CRE-100AS	51	48	44

NOTES:

- Sound measured at 1.4m away from the noisiest location of the unit.
- Data is valid at free field condition.
- Data is valid at nominal operation condition.
- Reference acoustic pressure 0dB(A) = 20μPa.
- Sound level will vary depending on a range of factors such as the construction (acoustic absorption coefficient) of particular room in which the equipment is installed.
- The operating conditions are assumed to be standard.

ActronAir is constantly seeking ways to improve the design of it's products, therefore specifications are subject to change without notice.
Please check prior to purchase. Copyright © 2016 Actron Engineering Pty. Ltd.

SPECIFICATIONS

URC-100AS / CRE-100AS

10.50 kW | 1 Phase | 1 Stage

UNIT DIMENSIONS

OUTDOOR DIMENSIONS	Depth	410 mm
	Height	810 mm
	Width	946 mm
INDOOR / PANEL DIMENSIONS	Depth	840 / 950 mm
	Height	287 / 55 mm
	Width	840 / 950 mm

ELECTRICAL

POWER SUPPLY		220 - 240 Volts / 1 Ph + N / 50Hz
WIRING METHOD		Hard wire to outdoor
FULL LOAD AMPS*	Total	21.5
FULL LOAD AMPS	Indoor	2.0
RATED LOAD AMPS**	Cooling	13.7
	Heating	12.7
IP RATING	Outdoor	IP24
	Indoor	IP20

IMPORTANT - The local electricity authority may require limits on starting current and voltage drop, please check prior to purchase.

*Full Load Amps are based on Compressor and Fan Motor's maximum expected current.

**Rated Load Amps are measured and tested in accordance with AS/NZS3823.1.1.

CABLE SIZE & CIRCUIT BREAKER SIZE

Suggested minimum cable size should be used as a guide only, refer to AS/NZS 3000 "Australian/New Zealand Wiring Rules" for more details.

Cable Size (Supply Mains)	4.0 mm^2 (SUGGESTED MINIMUM)
Cable Size (Indoor to Outdoor Wire)	1.0 mm^2 (2 Core + Earth)
Circuit Breaker Size	25.0 Amps

OUTDOOR COIL

TUBE TYPE	Copper Ø7mm, inner groove tube
FIN TYPE	Hydrophylic Aluminium
FACE AREA	0.76 m^2
FIN SPACING	1.4 mm
ROWS	3

OUTDOOR FAN

NUMBER OF FANS x TYPE	1 x Axial
INPUT (W)	150
AIRFLOW (l/s)	1069

INDOOR COIL

TUBE TYPE	Copper Ø7mm, inner groove tube
FIN TYPE	Hydrophylic Aluminium
FACE AREA	1.46 m^2
FIN SPACING	1.4 mm
ROWS	3

INDOOR FAN

NUMBER OF FANS x TYPE	1 x Centrifugal
INPUT (W)	232
AIRFLOW (l/s) - Hi / Med / Lo	444 / 408 / 361

AIR FILTERS

Air filters are supplied standard and pre-fitted.

COMPRESSOR

NUMBER PER UNIT x TYPE	1 x Twin-Rotary Compressor
STARTING METHOD	DC Inverter Starter
INPUT (W)	2600
REFRIGERANT OIL (TYPE / CHARGE)	ESTER OIL VG74 / 1000ml
PROTECTION	External Thermal Cut-Out

REFRIGERATION SYSTEM

REFRIGERANT TYPE	R-410A
FACTORY CHARGE	3800 g
PRE-CHARGE LENGTH	15 m
ADD'L. REFRIGERANT CHARGE	30 g / m
DESIGN PRESSURE (High / Low)	4.2 / 1.5 MPa

INTERCONNECTING PIPE RUN

MAX PIPE LENGTH		65 m
MIN PIPE LENGTH		5 m
MAX. VERTICAL LENGTH		30 m (Included in Max. Pipe Length)
FIELD PIPE SIZES		
Liquid Pipe		9.52 mm (3/8")
Gas Pipe		15.9 mm (5/8")
PIPE CONNECTIONS		
Indoor	Liquid Pipe	9.52 mm (3/8")
	Gas Pipe	15.9 mm (5/8")
Outdoor	Liquid Pipe	9.52 mm (3/8")
	Gas Pipe	15.9 mm (5/8")
CONNECTION TYPE		Flare Nut

ELECTRIC CONTROLS

DEFROST METHOD	Reverse Cycle
CONTROL FIELD WIRING (OUTDOOR TO INDOOR-FIELD SUPPLIED)	2 Core 14 / 0.20 (0.44mm^2) Shielded Data Cable
WALL CONTROLLER CABLE (INCLUDED WITH WALL CONTROLLER)	4 Core (0.75mm^2) Shielded Data Cable

OPERATING RANGE

It is essential that the unit is correctly sized for the application and operates within its recommended range of operating conditions as shown below.

MODE	RANGE	INDOOR OPERATING TEMPERATURE	OUTDOOR AIR INTAKE TEMPERATURE
COOLING	Max.	32ºC DB	50ºC DB
	Min.	17ºC DB	-15ºC DB
HEATING	Max.	30ºC DB	30ºC DB
	Min.	0ºC DB	-25ºC DB

ActronAir is constantly seeking ways to improve the design of it's products, therefore specifications are subject to change without notice.
Please check prior to purchase. Copyright © 2016 Actron Engineering Pty. Ltd.

URC-100AS (OUTDOOR)

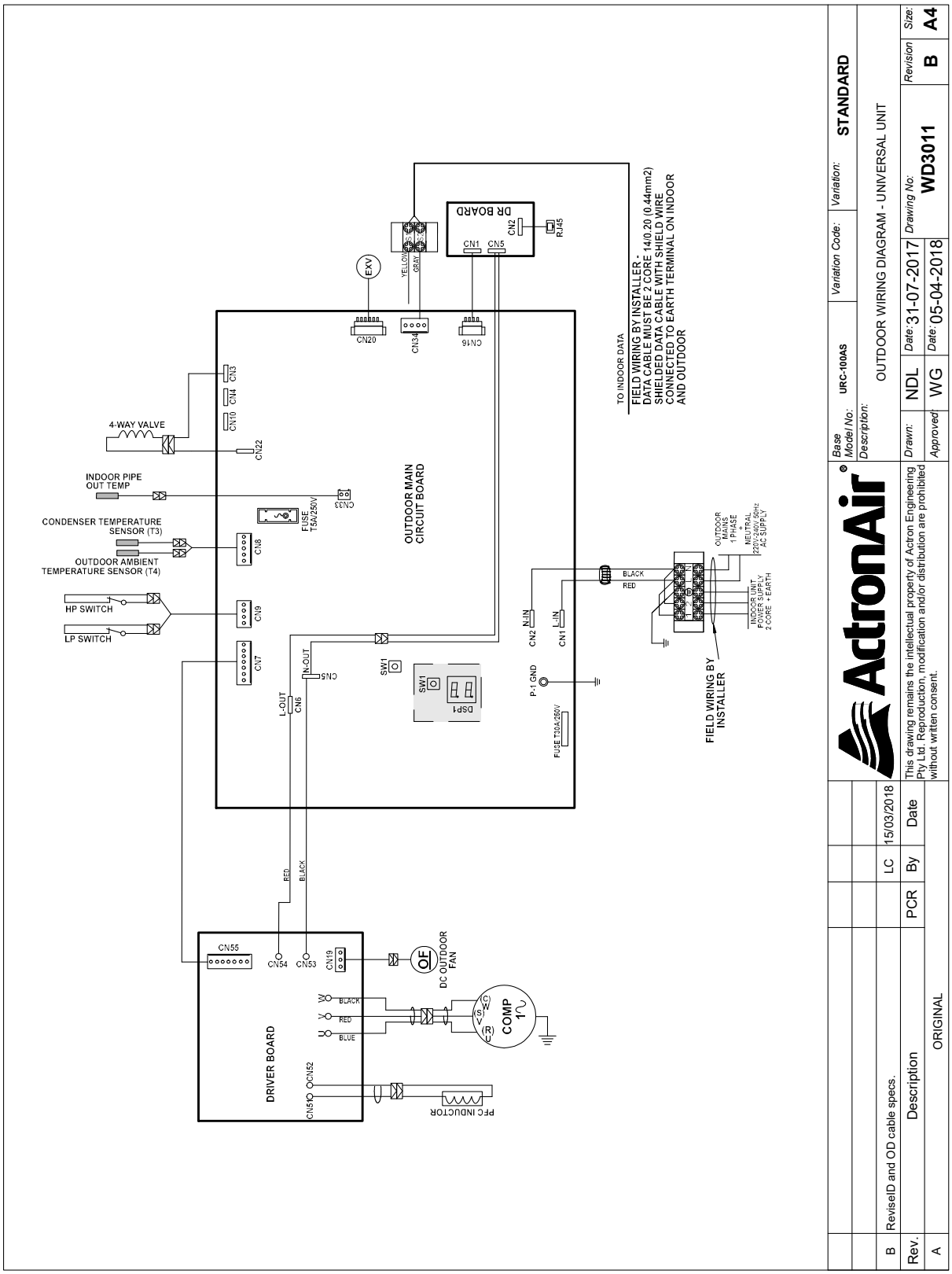

10.50 kW | 1 Phase | 1 Stage
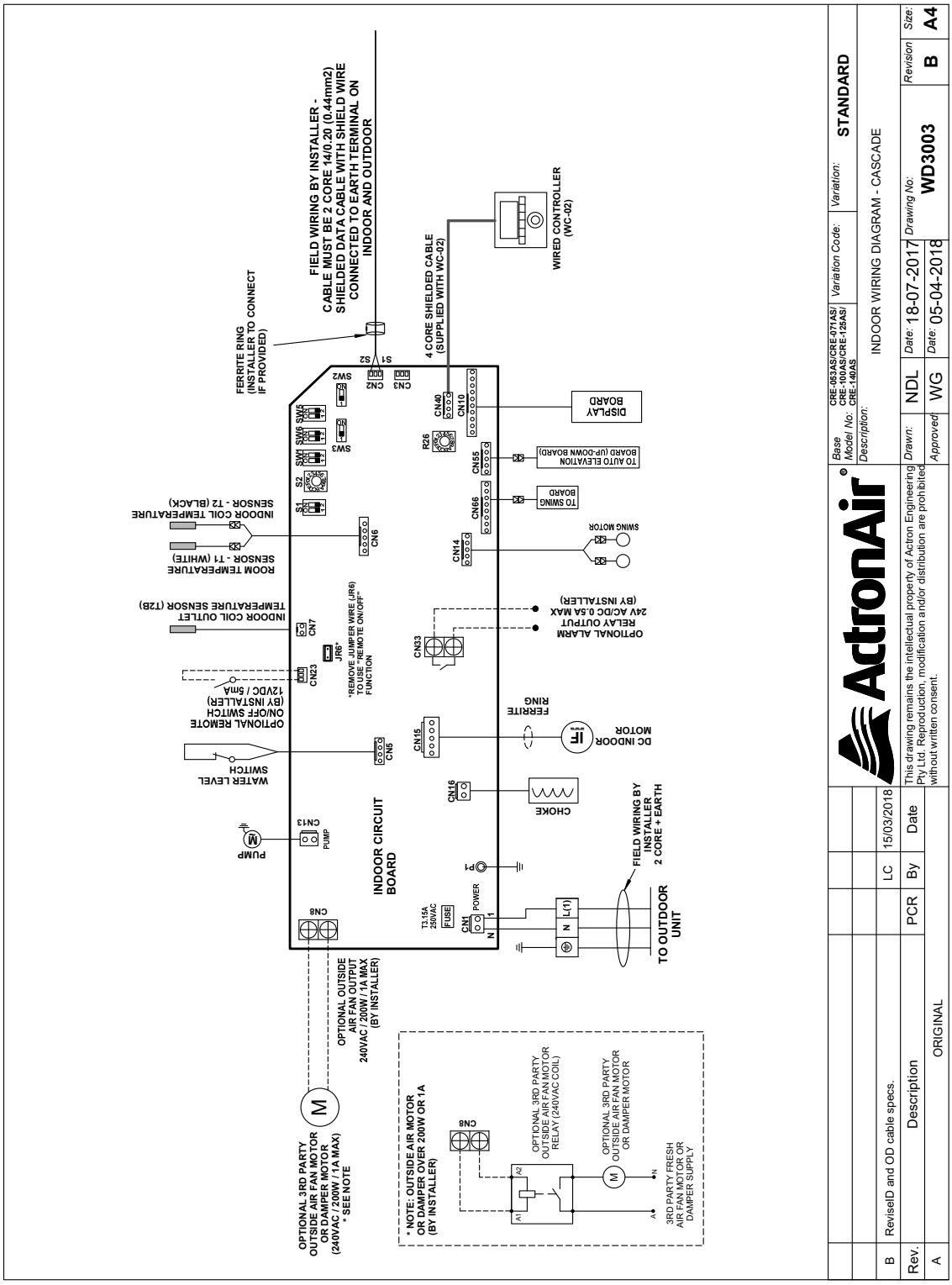
CRE-100AS (INDOOR)