SPLIT DUCTED UNIT

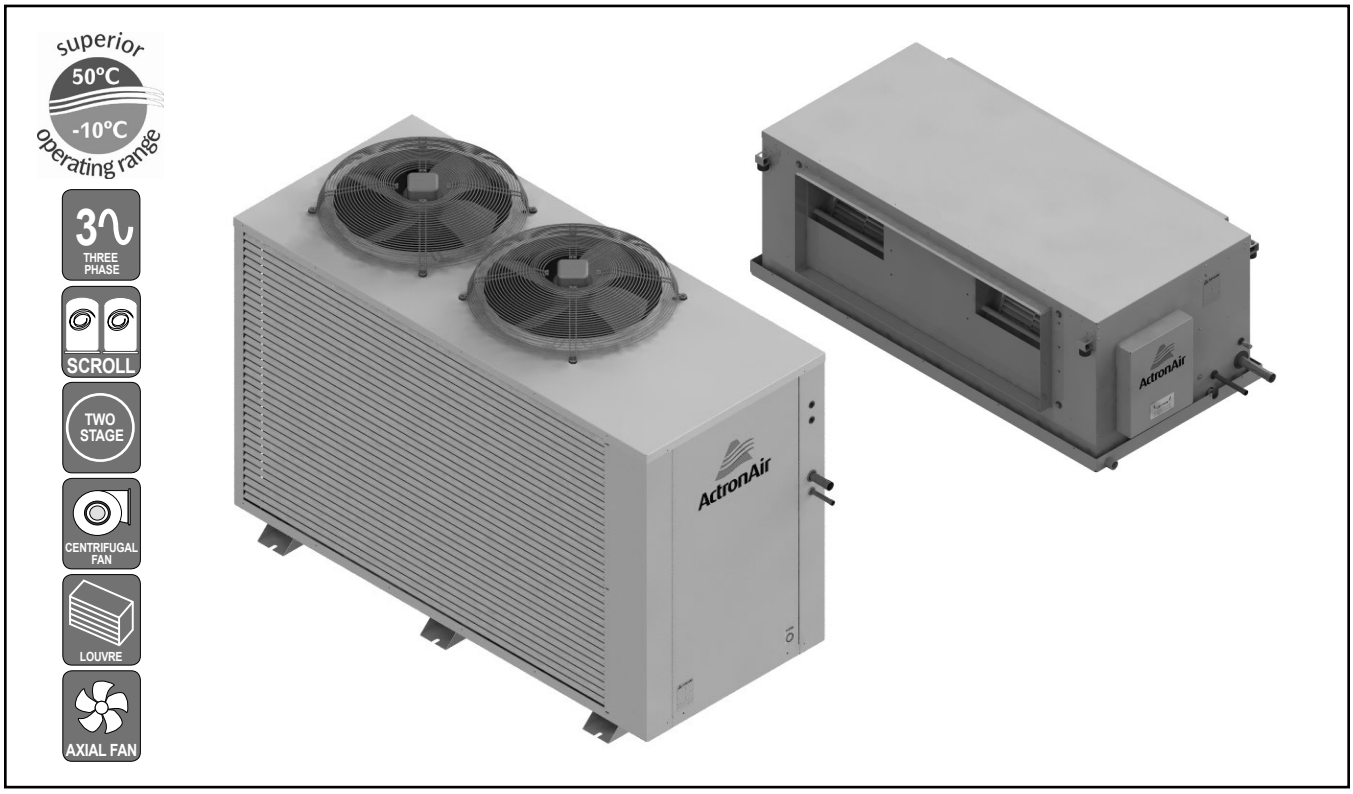

UNIT FEATURES

- Scroll Compressor
- Pre-charged with R410A Refrigerant
- Multiple Speed Outdoor Fans
- Blue Epoxy Coat Coil Fin Protection - Indoor & Outdoor Coils
- Louvred Outdoor Coil Guard
- Adaptive Demand Defrost
- Integral Fan Coil Safety Tray

UNIT OPTIONS

- Low Ambient
- Compressor Soft Starters
- Phase Protection
- Additional Full Coil Coat Protection
- Fault Detection Board

CONTROL OPTIONS

ActronAir C7-4 (**BCA Compliant**)

- 7-Day Programmable Controller with 2 Events/Day
- Temperature Set Back and After Hours Timer
- Zone Kit for Control up to 4 Zones
  (See Control Section)
- Auto, Heat & Cool Modes
- Auto/Continuous Indoor Fan Operation
- 2 Speed Indoor Fan Setting
- Hot Start Feature
- 2 Stage Cooling/Heating with 3rd Stage Boost Heat
- Manual Control Inputs
- Remote Temperature Sensors
- 24-Hour ON/OFF Timer
- Home/Building Automation ON/OFF Capability

UNIT COMPLIANCE

- MEPS 2012 / GEMS 2012
- AS/NZS 4755.3.1 Demand Response Capabilities
- AS/NZS 60335.1 Electrical Appliance Safety
- AS/NZS CISPR 11:2011 (Group 1 ClassA) EMC Compliance

SPECIFICATION SUMMARY

OUTDOOR UNIT MODEL	SCA300C	
INDOOR UNIT MODEL	SCA300E	
	[1] TOTAL	[2] NETT
[3] COOLING CAPACITY (kW)	28.90	27.70
[3] SENSIBLE CAPACITY (kW)	22.97	21.77
[4] HEATING CAPACITY (kW)	27.30	28.50
[5] COOLING INPUT POWER (kW)	8.50	
[5] HEATING INPUT POWER (kW)	8.72	
EER	3.40	3.26
COP	3.13	3.27
[6] INDOOR AIRFLOW (l/s) - MIN. / NOMINAL / MAX.	1275 / 1500 / 1650	
OUTDOOR SOUND PRESS. LEVEL @ 3M dB(A) - LOW / HIGH	55.9 / 59.9	
OUTDOOR SOUND POWER LEVEL dB(A) -- LOW / HIGH	72.9 / 76.9	
POWER SUPPLY - OUTDOOR	400V / 3Ph+N / 50Hz	
POWER SUPPLY - INDOOR	230V / 1 Ph+N / 50 Hz	
[2] RATED LOAD AMPS - OUTDOOR / INDOOR / TOTAL	14.6 / 5.5 / 20.1	
[7] FULL LOAD AMPS - OUTDOOR / INDOOR / TOTAL	20.0 / 7.1 / 27.1	
[8] CIRCUIT BREAKER AND CABLE AMPS	32.0	
APPROXIMATE STARTING AMPS	51.5	
WEIGHT (kg) -- INDOOR / OUTDOOR	115 / 300	

[1] Based on unit rating excluding indoor fan kW.
[2] Measured and tested in accordance with AS/NZS 3823.1.2.
[3] At 27°C DB / 19°C WB entering air temperatures and 35°C ambient.
[4] At 20°C DB entering air temperature and 7°C DB / 6°C WB ambient.
[5] input power includes indoor fan kW.
[6] Max. - Min. airflow application range.
[7] Full Load Amps are based on compressor and fan motors' maximum expected current.
[8] See Specifications sheet for cable size and circuit breaker size details.

Note: Use input power to estimate running cost.

ActronAir

ActronAir is constantly seeking ways to improve the design of it's products, therefore specifications are subject to change without notice.
Please check prior to purchase. Copyright © 2017 Actron Engineering Pty. Ltd.

CAPACITY SELECTION DATA

SCA300C / SCA300E

COOLING PERFORMANCE

AIR ENTERING		TOTAL	TOTAL SENSIBLE CAPACITY - kW AT DB TEMPERATURE ONTO INDOOR COIL - °C										
OUTDOOR DB - °C	INDOOR WB - °C	CAPACITY kW	20	21	22	23	24	25	26	27	28	29	30
25	16	29.27	18.31	19.88	21.21	22.71	24.14	25.56	26.78				
	17	29.93	16.69	18.27	19.86	21.17	22.70	24.18	25.57	26.90	28.02		
	18	30.77	15.05	16.64	18.22	19.80	21.38	22.66	24.13	25.57	26.91	28.21	29.32
	19	31.64	13.37	15.00	16.60	18.18	19.73	21.29	22.58	24.09	25.54	26.94	28.25
	20	32.49	11.70	13.33	14.91	16.54	18.10	19.67	21.21	22.52	24.04	25.50	26.94
	21	33.38		11.62	13.24	14.87	16.46	18.03	19.60	21.18	22.44	23.99	25.47
	22	34.39			11.55	13.16	14.78	16.37	17.97	19.53	21.09	22.66	23.89
30	16	28.28	17.79	19.35	20.67	22.16	23.62	24.97	26.05				
	17	28.80	16.18	17.74	19.31	20.65	22.16	23.63	25.03	26.30			
	18	29.52	14.52	16.11	17.70	19.26	20.58	22.10	23.59	25.02	26.34	27.53	
	19	30.34	12.87	14.48	16.07	17.66	19.22	20.77	22.05	23.55	25.02	26.40	27.65
	20	31.18	11.19	12.81	14.42	16.03	17.60	19.18	20.70	22.03	23.51	24.98	26.39
	21	32.02		11.12	12.75	14.35	15.95	17.52	19.12	20.65	21.96	23.46	24.91
	22	32.98			11.05	12.68	14.30	15.89	17.48	19.02	20.58	21.87	23.39
35	16	27.17	17.19	18.77	20.08	21.58	22.96	24.31					
	17	27.38	15.59	17.15	18.72	20.06	21.54	23.01	24.37	25.46			
	18	28.13	13.95	15.53	17.12	18.69	20.01	21.51	22.99	24.38	25.67	26.80	
	19	**28.90**	12.31	13.90	15.51	17.08	18.66	19.95	21.48	**22.97**	24.40	25.75	26.89
	20	29.67	10.63	12.24	13.86	15.45	17.03	18.59	20.14	21.44	22.90	24.36	25.75
	21	30.48		10.56	12.18	13.80	15.38	16.95	18.51	20.09	21.36	22.88	24.32
	22	31.38			10.49	12.13	13.72	15.31	16.88	18.47	20.01	21.31	22.80
40	16	25.92	16.55	17.90	19.41	20.89	22.25	23.41					
	17	25.94	14.94	16.51	18.07	19.38	20.87	22.30	23.61				
	18	26.58	13.32	14.90	16.49	18.06	19.34	20.85	22.30	23.68	24.85		
	19	27.28	11.66	13.26	14.86	16.43	17.99	19.32	20.81	22.29	23.70	24.97	26.07
	20	27.95	9.98	11.60	13.23	14.80	16.39	17.95	19.27	20.77	22.23	23.68	25.04
	21	28.75		9.94	11.55	13.15	14.74	16.33	17.88	19.45	20.73	22.20	23.64
	22	29.61			9.86	11.49	13.11	14.69	16.27	17.83	19.38	20.67	22.15
45	16	24.52	15.85	17.21	18.68	20.15	21.43						
	17	24.53	14.26	15.83	17.19	18.65	20.14	21.49	22.52				
	18	24.88	12.63	14.24	15.80	17.16	18.64	20.13	21.56	22.82			
	19	25.55	11.01	12.61	14.19	15.76	17.31	18.63	20.11	21.56	22.89	23.97	
	20	26.17	9.34	10.94	12.56	14.14	15.71	17.27	18.60	20.06	21.52	22.93	24.17
	21	26.96		9.28	10.90	12.50	14.10	15.66	17.23	18.55	20.03	21.48	22.94
	22	27.72			9.22	10.86	12.44	14.04	15.62	17.17	18.50	20.00	21.47
50	16	23.00	15.10	16.45	17.91	19.32	20.47						
	17	23.01	13.53	15.09	16.44	17.90	19.33	20.59					
	18	23.02	11.91	13.49	15.06	16.41	17.88	19.34	20.69	21.86			
	19	23.68	10.29	11.87	13.45	15.03	16.38	17.87	19.34	20.74	21.94		
	20	24.21	8.62	10.24	11.83	13.43	14.98	16.53	17.84	19.29	20.72	22.04	23.20
	21	24.92		8.59	10.19	11.79	13.37	14.94	16.48	17.80	19.27	20.71	22.10
	22	25.61			8.53	10.13	11.73	13.32	14.89	16.43	17.77	19.22	20.69

28.90 kW | **2 Stage** | **3 Phase**

HEATING PERFORMANCE

WB TEMP ON OD COIL- °C	HEATING CAPACITY - kW AT DB ENTERING INDOOR - °C									
	16		18		20		22		24	
	TH	IH	TH	IH	TH	IH	TH	IH	TH	IH
-10	17.90	17.18	17.80	17.09	17.69	16.98	17.56	16.86	17.45	16.75
-8	18.95	18.01	18.83	17.89	18.70	17.77	18.57	17.64	18.49	17.57
-6	20.00	18.80	19.92	18.73	19.80	18.61	19.67	18.49	19.54	18.36
-4	21.23	19.53	21.09	19.40	20.95	19.28	20.80	19.14	20.65	19.00
-2	22.46	19.99	22.31	19.85	22.15	19.71	21.97	19.55	21.81	19.41
0	23.77	20.92	23.60	20.77	23.42	20.61	23.24	20.45	23.05	20.29
2	25.03	22.77	24.83	22.59	24.64	22.42	24.43	22.23	24.23	22.05
4	26.37	26.37	26.16	26.16	25.93	25.93	25.71	25.71	25.49	25.49
6	27.77	27.77	27.54	27.54	**27.30**	**27.30**	27.05	27.05	26.80	26.80
8	29.26	29.26	29.00	29.00	28.82	28.82	28.55	28.55	28.28	28.28
10	30.93	30.93	30.64	30.64	30.36	30.36	30.06	30.06	29.77	29.77
12	32.58	32.58	32.26	32.26	31.95	31.95	31.62	31.62	31.31	31.31
14	34.28	34.28	33.95	33.95	33.60	33.60	33.25	33.25	32.91	32.91
16	36.06	36.06	35.68	35.68	35.31	35.31	34.94	34.94	34.57	34.57
18	37.91	37.91	37.50	37.50	37.09	37.09	36.69	36.69	36.29	36.29

TH - Total Heating Capacity (kW).
IH - Integrated Heating Capacity (kW) Includes defrost losses.

AIRFLOW CORRECTION MULTIPLIER

% VARIATION	-15%	-10%	-5%	**NOMINAL**	+5%	+10%
INDOOR AIRFLOW (l/s)	1275	1350	1425	**1500**	1575	1650
TOTAL COOLING	0.972	0.982	0.991	**1.00**	1.008	1.014
SENSIBLE COOLING	0.919	0.947	0.973	**1.00**	1.027	1.053
HEATING FACTOR	0.991	0.994	0.997	**1.00**	1.002	1.004

NOTES:
1. No allowance has been made for the effect of indoor fan motor.
2. Selection tables are based on nominal airflows. Correction factors must be applied for selection away from these conditions.

PIPE LENGTH CORRECTION MULTIPLIER

	5m	10m	20m	30m	40m	50m	60m
COOLING	**1.000**	0.992	0.979	0.965	0.951	0.939	0.926
HEATING	**1.000**	1.000	1.000	1.000	1.000	1.000	1.000

Correction multipliers are based on horizontal pipe runs.

ActronAir

Please check prior to purchase. Copyright © 2017 Actron Engineering Pty. Ltd.

OUTDOOR UNIT
SCA300C

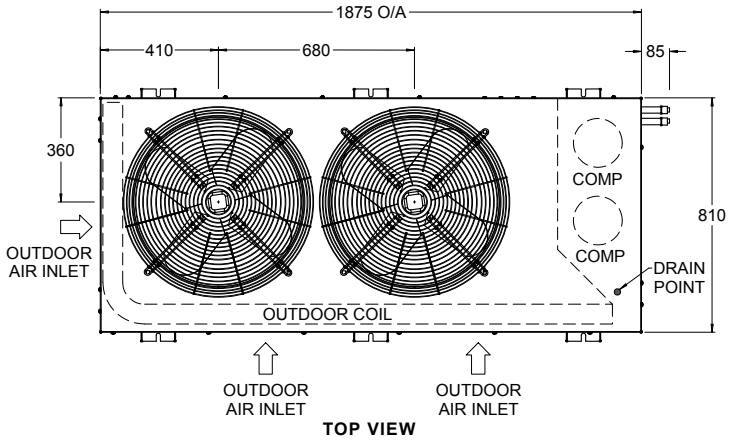

TOP VIEW

OVERALL NOMINAL DIMENSION (H x W x L)
= 1330 x 1875 x 875
USE M12 BOLT FOR FEET MOUNTING

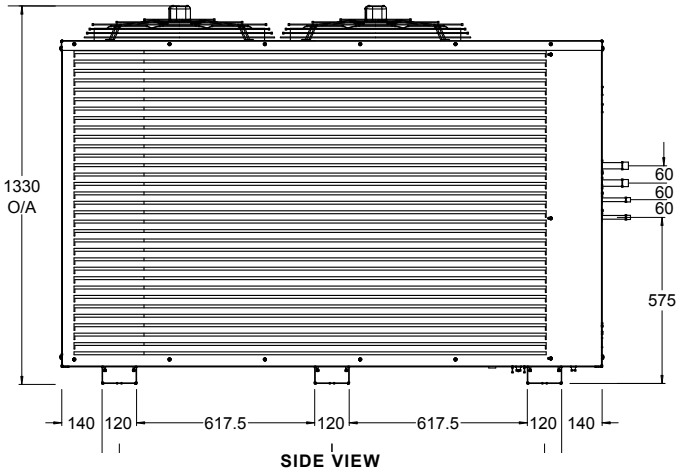

SIDE VIEW

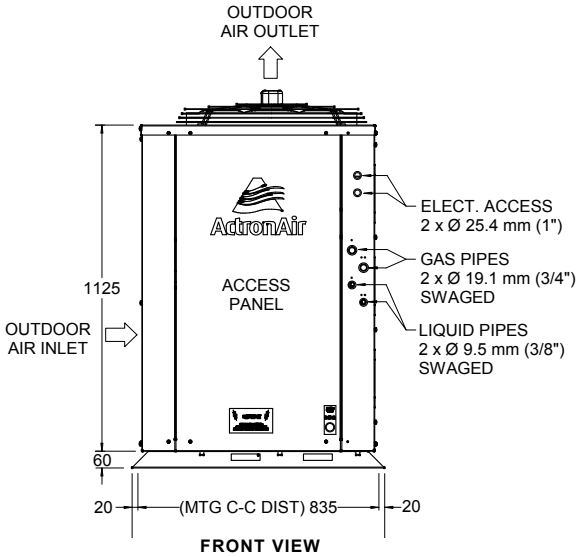

FRONT VIEW

3 Phase | 2 Stage | 28.90 kW

INDOOR UNIT
SCA300E

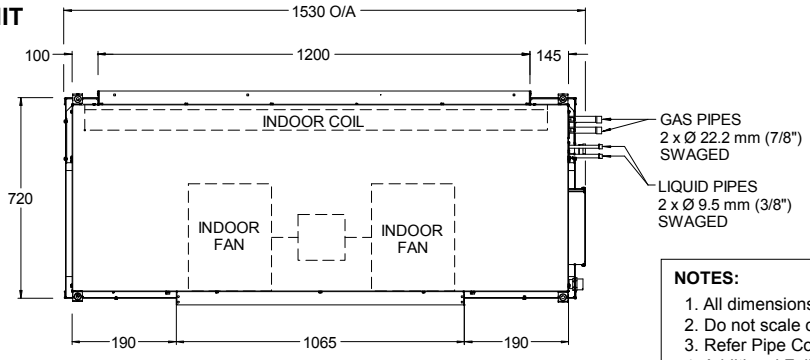

TOP VIEW

OVERALL NOMINAL DIMENSION
(H x W x L)= 535 x 1530 x 770
SUPPLY DUCT (H x W) = 370 x 1065
RETURN DUCT = 435 x 1200
USE M12 BOLT FOR FEET MOUNTING

NOTES:

1. All dimensions are in mm unless specified.
2. Do not scale drawing.
3. Refer Pipe Connection Details on Specifications Sheet.
4. Additional Full Coil Coat Protection option available on all units.

THIRD ANGLE PROJECTION

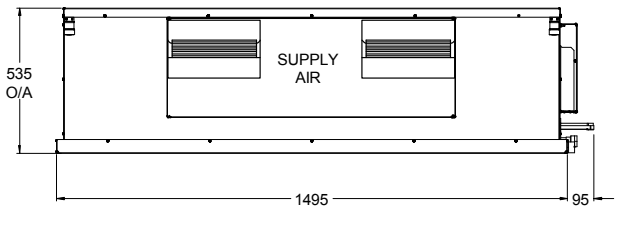

FRONT VIEW

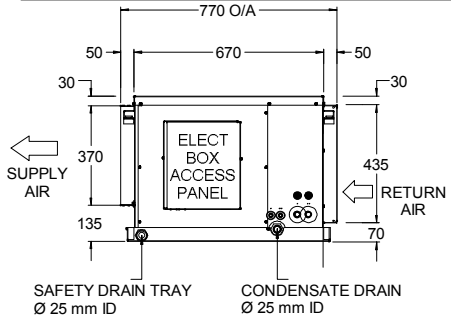

SIDE VIEW

MINIMUM SERVICE ACCESS CLEARANCES & AIRFLOW SPACE ALLOWANCES

OUTDOOR UNIT SCA300C

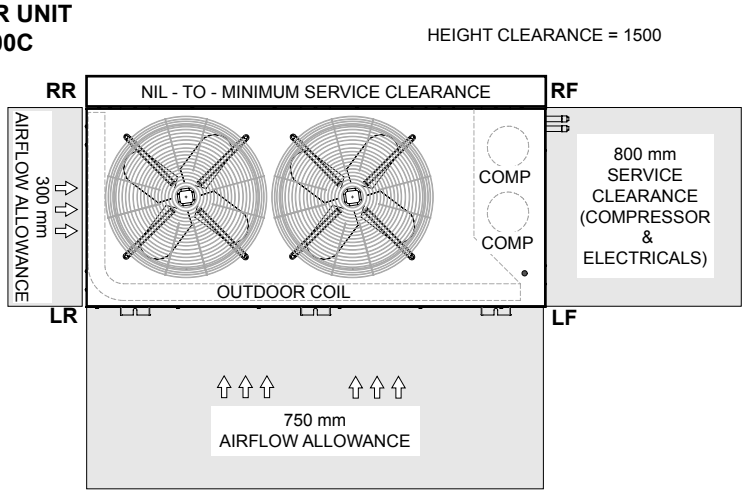

TOP VIEW

PLEASE NOTE THAT UNDER ALL CIRCUMSTANCES, CONDENSER AIR MUST NOT RECIRCULATE BACK ONTO CONDENSER COIL. KEEP ALL CLEARANCES FREE OF ANY OBSTRUCTIONS

NOTES:

THIRD ANGLE PROJECTION

1. All dimensions are in mm unless specified.
2. Do not scale drawing.
3. Additional Full Coil Coat Protection option available on all units.
4. Suggested Service Clearance and Airflow Allowances are based on conditions that the spaces are free from obstructions and walkway passage of 1m is available to allow coil replacement without lifting coil over the top of the unit.
5. Minimum service access areas are responsibilities of the installer.
6. Maximum External Static of Outdoor Fans is 5 Pa.
7. **STACKING OF UNITS:** Ensure that minimum airflow and clearances are met.

INDOOR UNIT SCA300E

28.90 kW | 2 Stage | 3 Phase

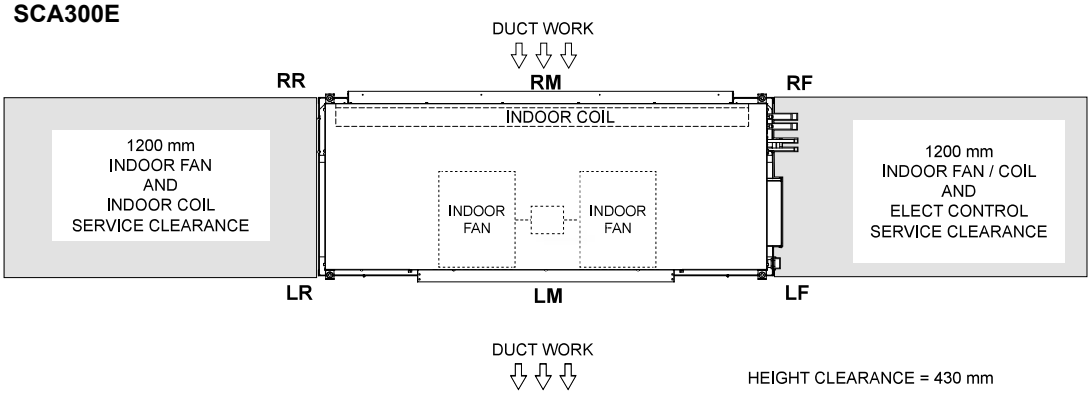

TOP VIEW

INDOOR UNIT FAN CURVE

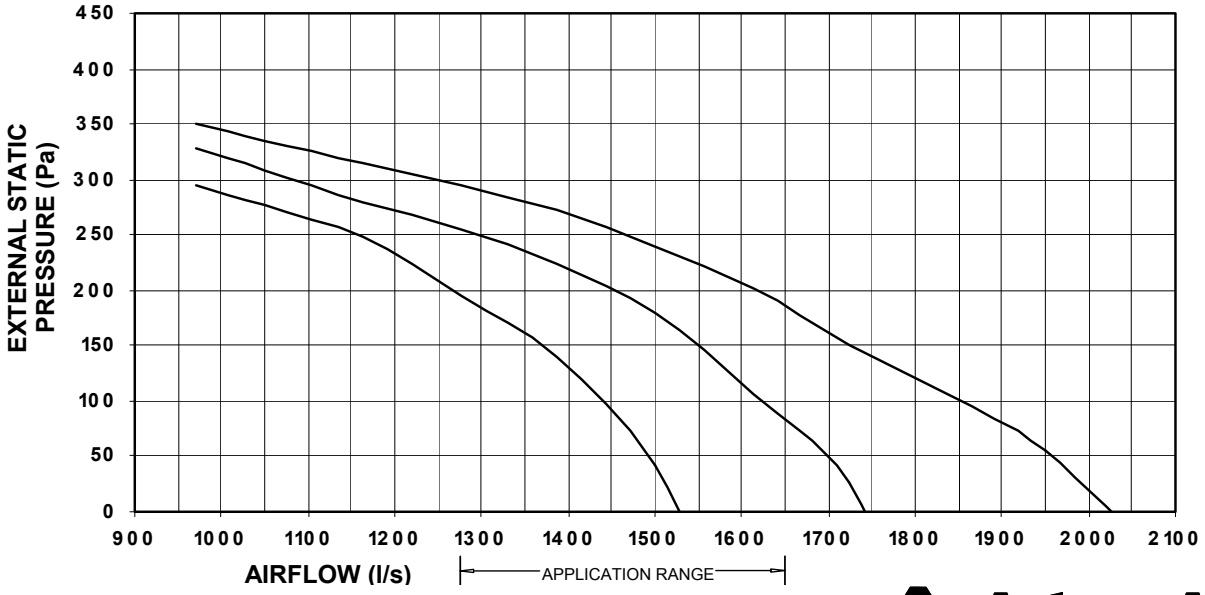

* Performance Fan Curve shown is at Dry Coil Condition for 9x9 S - 1100W - Twin Deck Fan.

ActronAir is constantly seeking ways to improve the design of it's products, therefore specifications are subject to change without notice.
Please check prior to purchase. Copyright © 2017 Actron Engineering Pty. Ltd.

Outdoor Radiated

Sound Power Level (SWL)

Fan Speed	Sound Power Level dB(A)	Octave Band Centre Frequency (Hz), dB						
		125	250	500	1k	2k	4k	8k
Low	72.9	74.1	73.3	70.2	67.7	64.5	58.9	53.0
High	76.9	78.4	78.1	74.9	71.4	66.8	63.7	57.5

Indoor Outlet

Sound Power Level (SWL)

Airflow Setting	Airflow Li/s	Sound Power Level dB(A)	Octave Band Centre Frequency (Hz), dB						
			125	250	500	1k	2k	4k	8k
Nominal	1500	78.0	75.3	77.1	76.0	73.0	69.4	65.3	60.4

OUTDOOR RADIATED

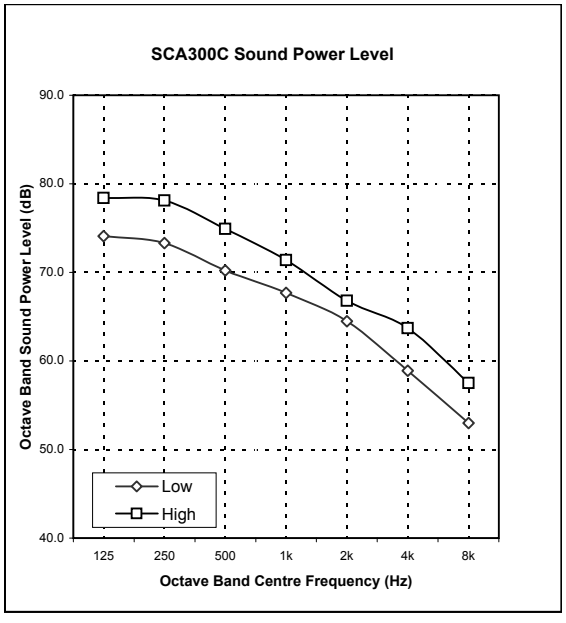

INDOOR OUTLET

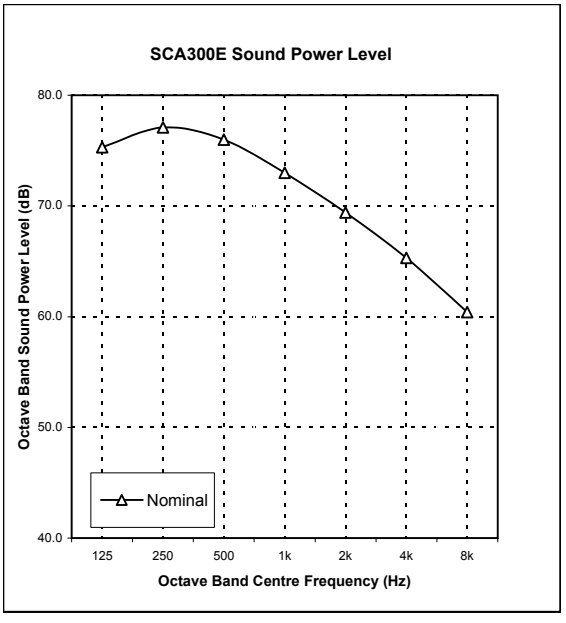

NOTES:

1. Radiated sound power levels are based on ISO 3743-2.
2. Outlet sound power levels are based on ISO 13347-2.

SPECIFICATIONS

SCA300C / SCA300E

28.90 kW | 2 Stage | 3 Phase

CONSTRUCTION

CABINET (Indoor Unit)	0.5 - 1.2 mm Galvanized Steel
CABINET (Outdoor Unit)	0.9 - 1.6 mm ZA & Galv. Steel
SURFACE FINISH (Outdoor Unit)	65 μ Baked Polyester Powder Coat

INSULATION (Indoor Unit)

TYPE	10 mm Foil Faced Polyethylene
	15 mm Expanded Polystyrene

ELECTRICAL

OUTDOOR UNIT	
Power Supply - 50 Hz	400 Volts x 3 Phase + N
Voltage Range (min - max)	380 V - 440 V
Full Load Amps*	20.0
Rated Load Amps**	14.6
Approximate Starting Amps	51.5
IP Rating	IP44
INDOOR UNIT	
Power Supply - 50 Hz	230 Volts x 1 Phase + N
Voltage Range (min - max)	216 V - 253 V
Full Load Amps*	7.1
IP Rating	IP20
OUTDOOR & INDOOR UNIT (TOTAL)	
Full Load Amps* - Phase 1	27.1
Full Load Amps* - Phase 2 & 3	16.8 & 17.6
Rated Load Amps**	20.1

IMPORTANT - The local electricity authority may require limits on starting current and voltage drop, please check prior to purchase.

* Full Load Amps are based on Compressor and Fan Motor's maximum expected current.

** Rated Load Amps are measured and tested in accordance with AS/NZS3823.1.2.

CABLE SIZE & CIRCUIT BREAKER SIZE

Suggested minimum cable size should be used as a guide only, refer to AS/NZS 3000 "Australian/New Zealand Wiring Rules" for more details.

Cable Size (main line)	6.0 mm^2 (SUGGESTED MINIMUM)
Cable Size (indoor to outdoor wire)	1.0 mm^2 (SUGGESTED MINIMUM)
Circuit Breaker Size	32.0 Amps

OUTDOOR COIL

TUBE TYPE	Copper - Rifle Bore
FIN TYPE	Aluminium - Wave
FACE AREA (m sqr)	2.51
FIN SPACING (per m)	630
COIL COATING	Blue Epoxy Coat Coil Fin Protection
ROWS	---

OUTDOOR FAN

NUMBER OF FANS x TYPE	2 x Axial
NUMBER OF BLADES PER FAN	4
DIAMETER (mm)	560
OUTPUT kW	0.37
MOTOR TYPE / DRIVE TYPE	6 Pole External Rotor / Direct
FAN SPEED CONTROL	2 Speed via Capacitor

The standard type outdoor fans fitted to this unit will accept up to 5Pa of external static resistance.

INDOOR COIL

TUBE TYPE	Copper - Rifle Bore
FIN TYPE	Aluminium - Louvre
FACE ARE (m sqr)	0.65
FIN SPACING (per m)	472
COIL COATING	Blue Epoxy Coat Coil Fin Protection
ROWS	---

INDOOR FAN

NUMBER OF FANS x TYPE	1 x Twin Deck Centrifugal Fan
DIAMETER / WIDTH (mm)	240 x 240
OUTPUT kW / INPUT kW	1.10 / 1.20
MOTOR TYPE / DRIVE TYPE	3 Speed 4 Pole / Direct

AIR FILTERS

All return air including fresh air must have adequate filters supplied and fitted by the installing contractor. Filters must be located in accessible location between the return air grille and the unit.-

ActronAir® does not supply or make any provisions for return air filter.

COMPRESSOR

NUMBER PER UNIT x TYPE	2 x Scroll (Hermetic)
FULL LOAD AMPS	17.2
LOCKED ROTOR AMPS	51.5
STARTING METHOD	D.O.L. (optional soft starter)

REFRIGERATION SYSTEM

REFRIGERANT TYPE	R-410A
EXPANSION CONTROL	Direct Expansion Orifice
FACTORY CHARGE (grams)	4,725 per stage (per compressor)
PRE-CHARGE LENGTH (metres)	5
ADDITIONAL REF. CHARGE (gm/m)	50 per stage

FILTER DRIER

CONNECTION SIZE & TYPE	9.52 mm (3/8") ODF Soldered Bi-Flow
FACTORY SUPPLIED / FITTED	No

See Installation Section for complete Filter Drier specifications.

INTERCONNECTING PIPE RUN

MAX PIPE LENGTH (metres)		60
MAX. VERTICAL LENGTH (metres)		20 (Included in Max. Pipe Length)
FIELD PIPE SIZES		
Liquid Pipe		9.52 mm (3/8")
Gas Pipe		19.1 mm (3/4")
PIPE CONNECTIONS		
Indoor	Liquid Pipe	2 x 9.52 mm (3/8") Swaged to fit 9.52 mm (3/8") field pipe
	Gas Pipe	2 x 22.2 mm (7/8") Swage to be cut-off to fit 19.1 mm (3/4") field pipe
Outdoor	Liquid Pipe	2 x 9.52 mm (3/8") Swaged to fit 9.52 mm (3/8") field pipe
	Gas Pipe	2 x 19.1 mm (3/4") Swaged to fit 19.1 mm (3/4") field pipe
CONNECTION TYPE		Solder

Insulate both gas and liquid pipes separately.

PROTECTION DEVICES

HIGH PRESSURE CUTOUT SWITCH	Nonadjustable (Automatic Reset)
LOW PRESSURE CUTOUT SWITCH	Nonadjustable (Automatic Reset)
COMPRESSOR MOTOR TEMP.	Internal Thermal Cut-Out
INDOOR FAN OVERLOAD	Internal Thermal Cut-Out
OUTDOOR FAN OVERLOAD	Internal Thermal Cut-Out
SUMP HEATER WATTS	2 x 30 W during Comp. Off Cycle

ELECTRIC CONTROLS

DEFROST METHOD	Reverse Cycle
DEFROST TYPE	Adaptive Demand Defrost
CONTROL CIRCUIT BREAKER	16.0 Amps
CONTROL FIELD WIRING	2 Core 14 / 0.20 Screened Cable

OPERATING RANGE

It is essential that the unit is correctly sized for the application and operates within its recommended range of operating conditions as shown below.

MODE		RANGE	INDOOR AIR INTAKE TEMPERATURE	OUTDOOR AIR INTAKE TEMPERATURE
Cooling		Max.	30°C DB / 22°C WB	50°C DB
		Min.	20°C DB / 16°C WB	15°C DB
Heating		Max.	24°C DB	19.5°C DB / 18°C WB
		Min.	16°C DB	-10°C WB
IMPORTANT - For low ambient cooling use option S. Lower ambient available on request. Contact your nearest ActronAir office for more details.				
Low Ambient Cooling	Option S	Max.	29°C DB / 19°C WB	50°C DB
		Min.	20°C DB / 15°C WB	5°C DB
	On Request	Max.	29°C DB / 19°C WB	50°C DB
		Min.	20°C DB / 15°C WB	-5°C DB

ActronAir

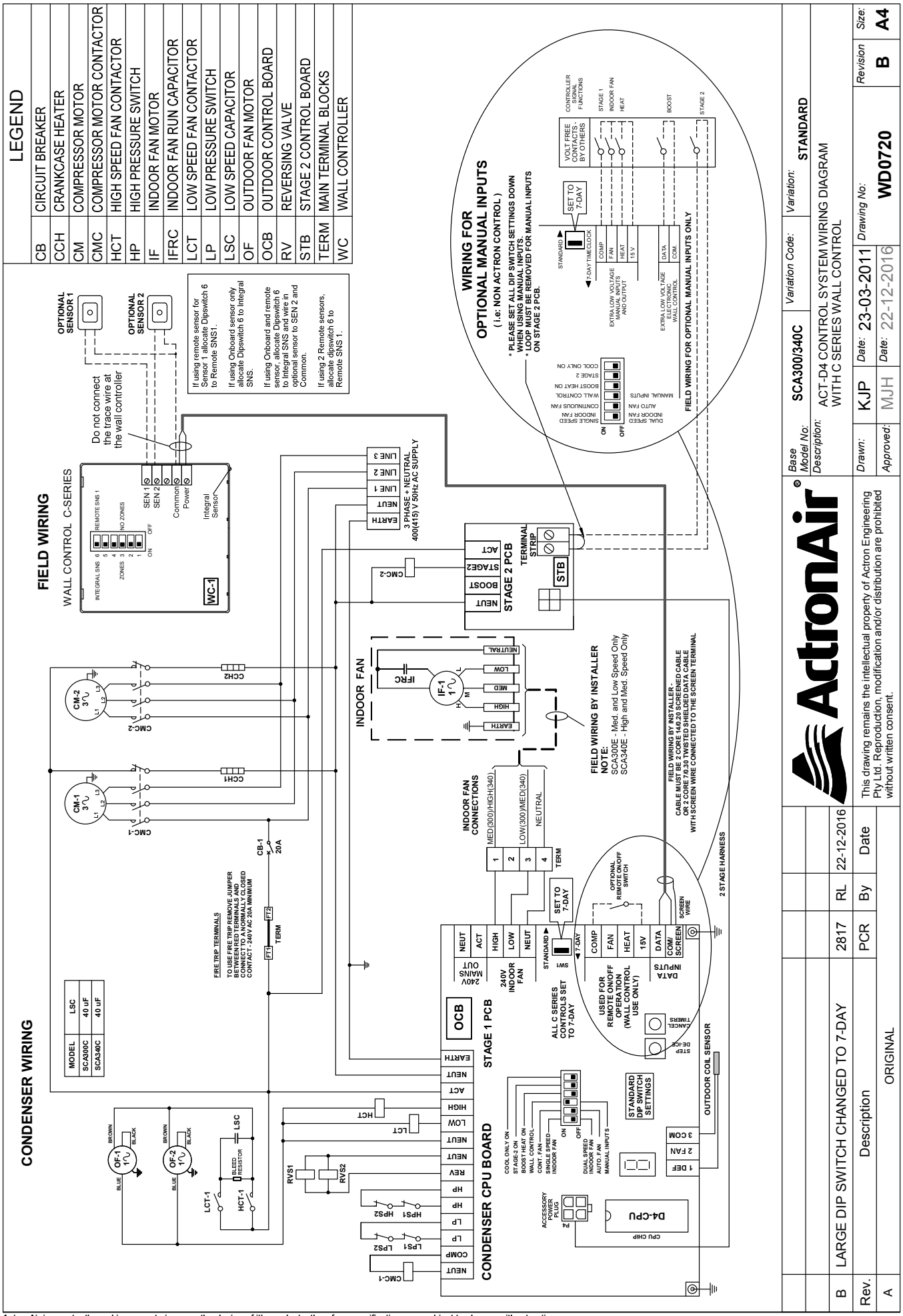

Rev.	Description	By	Date
B	LARGE DIP SWITCH CHANGED TO 7-DAY	RL	22-12-2016
A	ORIGINAL	PCR	2817

ActronAir®

Base Model No: SCA300/340C | Variation Code: | Variation: STANDARD

Description: ACT-D4 CONTROL SYSTEM WIRING DIAGRAM WITH C SERIES WALL CONTROL

Drawn: KJP | Date: 23-03-2011 | Drawing No: WD0720 | Revision: B | Size: A4

Approved: MJH | Date: 22-12-2016

This drawing remains the intellectual property of Actron Engineering Pty Ltd. Reproduction, modification and/or distribution are prohibited without written consent.

28.90 kW

3 Phase | 2 Stage

H OUTDOOR UNIT - HORIZONTAL DISCHARGE FANS 5 Pa

OVERALL NOMINAL DIMENSION (H x W x L)
= 1185 x 1875 x 980
USE M12 BOLT FOR FEET MOUNTING

NOTES:

THIRD ANGLE PROJECTION

1. All dimensions are in mm unless specified.
2. Do not scale drawing.
3. Additional Full Coil Coat Protection option available on all units.
4. Refer Pipe Connection Details on Specifications Sheet.
5. Suggested Service Clearance and Airflow Allowances are based on conditions that the spaces are free from obstructions and walkway passage of 1000mm is available.
6. Minimum service access areas are responsibilities of the installer.

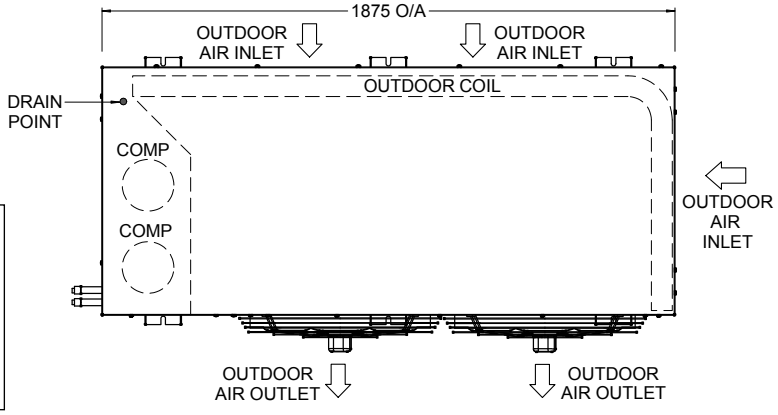

TOP VIEW

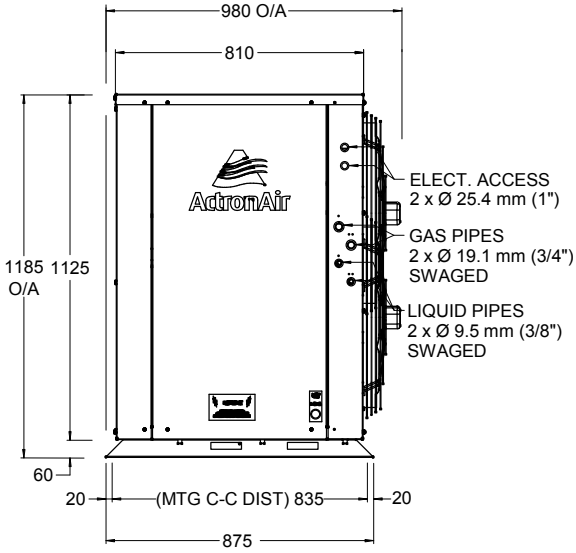

FRONT VIEW

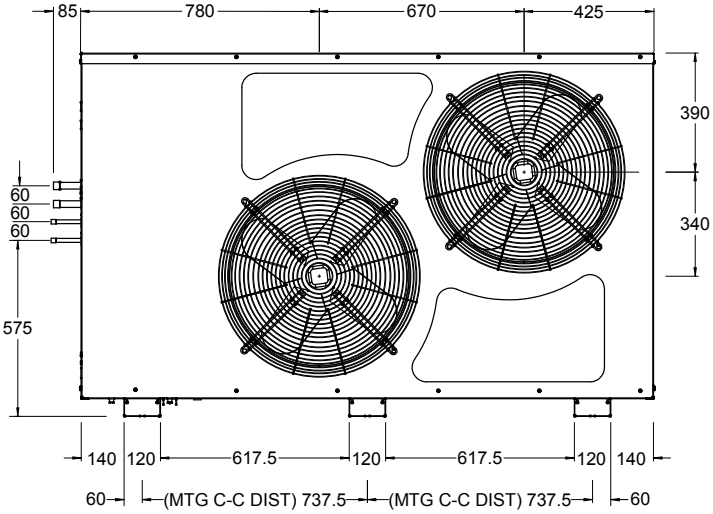

SIDE VIEW

28.90 kW | 2 Stage | 3 Phase

MINIMUM SERVICE ACCESS CLEARANCES & AIRFLOW SPACE ALLOWANCES

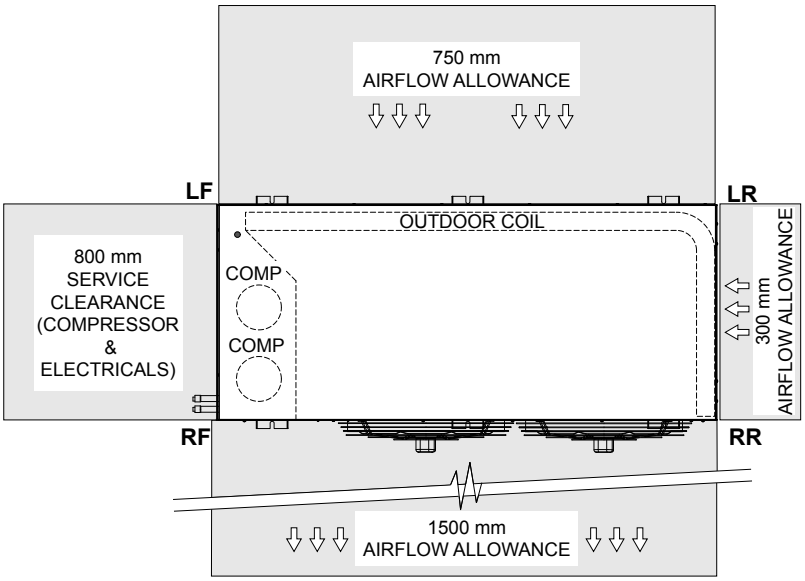

TOP VIEW

PLEASE NOTE THAT UNDER ALL CIRCUMSTANCES, CONDENSER AIR MUST NOT RECIRCULATE BACK ONTO CONDENSER COIL. KEEP ALL CLEARANCES FREE OF ANY OBSTRUCTIONS

STACKING OF UNITS	
ONE IN FRONT OF THE OTHER (DISTANCE BET. **LF** & **LR**)	SIDE BY SIDE (DISTANCE BET. **LF** & **RF**)
800 mm	CONTACT ACTRONAIR TECHNICAL SUPPORT

HEIGHT CLEARANCE = 600

Please check prior to purchase. Copyright © 2017 Actron Engineering Pty. Ltd.

V INDOOR UNIT - UPRIGHT FAN COIL WITH VERTICAL DISCHARGE

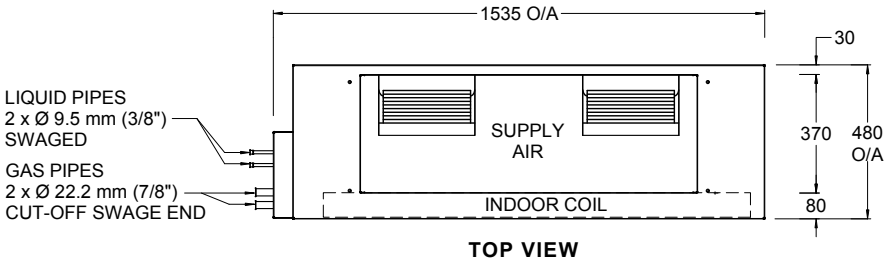

TOP VIEW

OVERALL NOMINAL DIMENSION (H x W x L)
= 1065 x 1535 x 480
SUPPLY DUCT (H x W) = 370 x 1055
RETURN DUCT (H xW) = 485 x 1245
DRAIN CONNECTION = 25mm ID

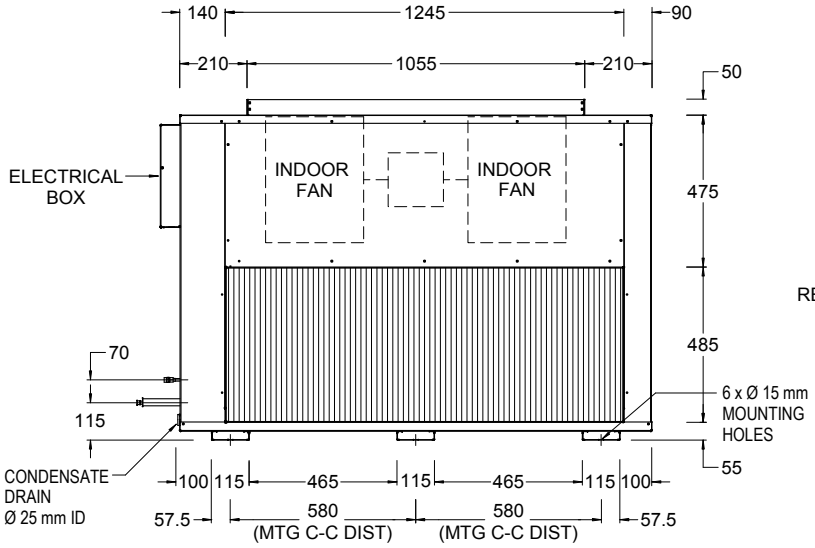

FRONT VIEW

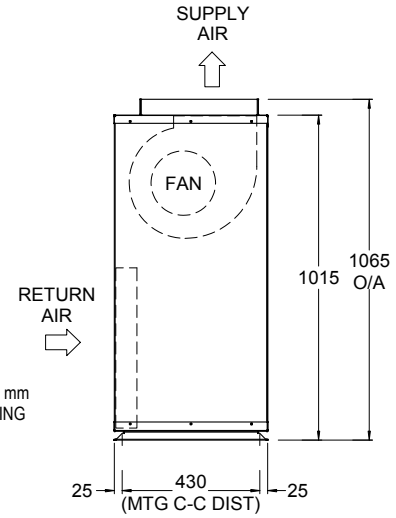

SIDE VIEW

MINIMUM SERVICE ACCESS CLEARANCES & AIRFLOW SPACE ALLOWANCES

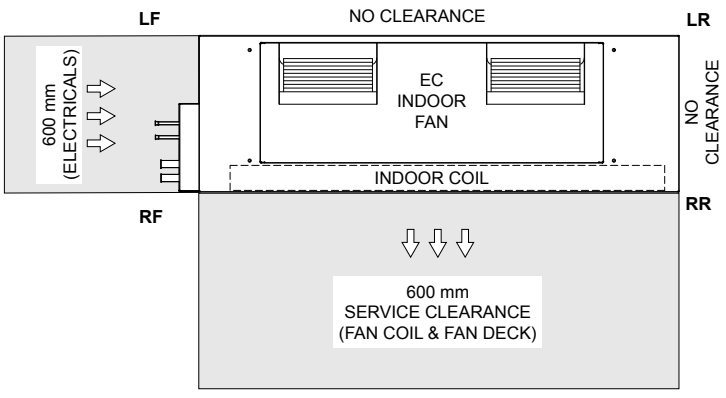

HEIGHT CLEARANCE = DUCT WORK

TOP VIEW

NOTES:

THIRD ANGLE PROJECTION

1. All dimensions are in mm unless specified.
2. Do not scale drawing.
3. Refer Fan Curve to corresponding standard SCG300E model.
4. Additional Full Coil Coat Protection option available on all units.
5. Suggested Service Clearance and Airflow Allowances are based on conditions that the spaces are free from obstructions and walkway passage of 1000mm is available.
6. Minimum service access areas are responsibilities of the installer.
7. **STACKING OF UNITS:** Ensure that minimum airflow and clearances are met.

Please check prior to purchase. Copyright © 2017 Actron Engineering Pty. Ltd.