TECHNICAL SELECTION DATA | PKV2000T

HERCULES PACKAGE UNIT

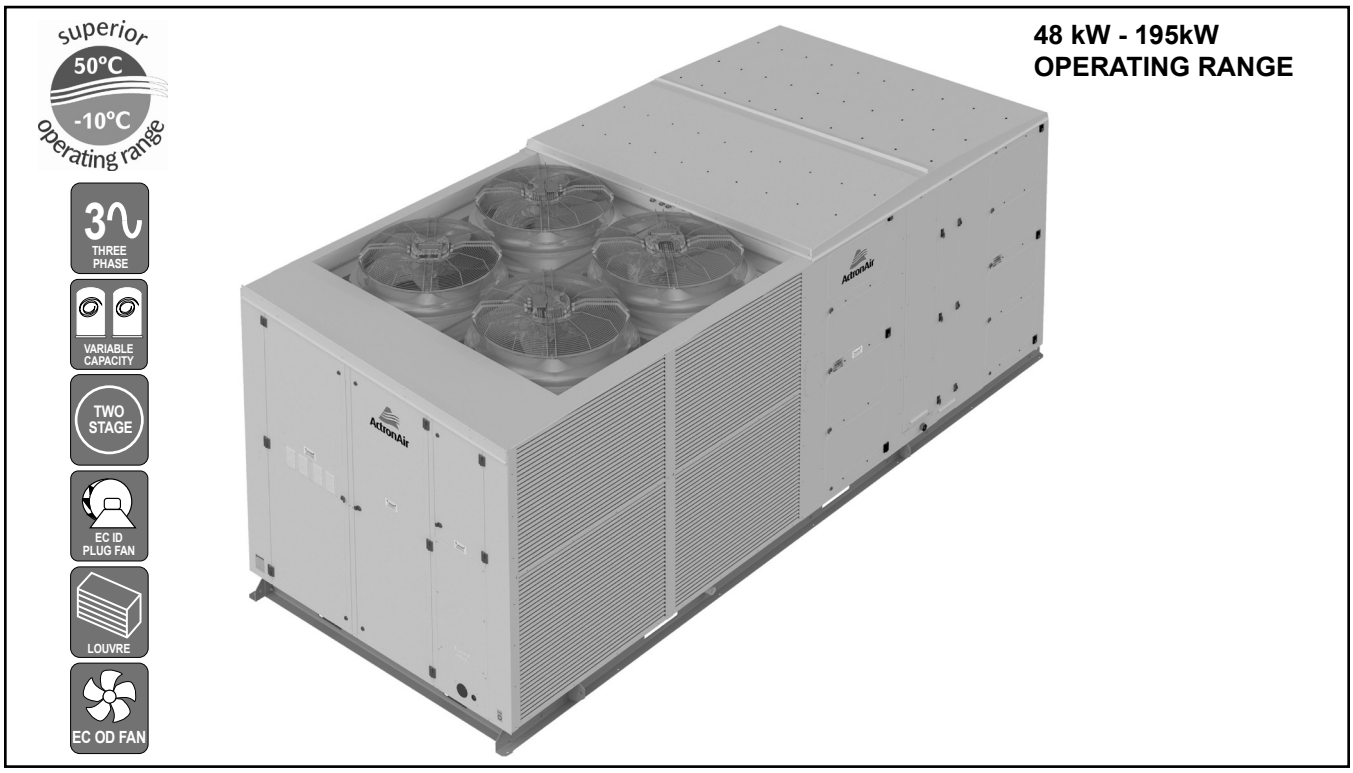

48 kW - 195kW OPERATING RANGE

UNIT FEATURES

- Variable Speed Scroll Compressors
- Automatic Compressor Run Time Management
- Bi-Flow Electronic Expansion Valves
- Full Factory Charged with R-410A Refrigerant
- EC Variable Speed Outdoor Fans - up to 80Pa External Static Pressure as Standard
- Blue Hydrophilic Coat Coil Fin Protection - Outdoor Coil & Indoor Coil
- Louvred Outdoor Coil Guard
- External Stainless Steel Screws
- EC Variable Speed Backward Curve Indoor Plug Fan
- Adjustable Indoor Fan Airflow Setpoint
- Automatic Air Volume Control within Fan Limits
- Control Interface with LCD Display - Included for System Operation
- Adjustable Dirty Return Air Filter Alarm
- Active Power Factor Correction
- 100mm Return Air Filter Rails with Optional Sliders - Fitted
- Foil Faced Polyethylene Insulation - Indoor Section
- Three Phase Protection on all Motors

CONTROL FEATURES

ActronAir CP10 Control Interface (**BCA Compliant**)

- Auto / Cool / Heat / Fan Only Modes
- 7-Day Time Clock with 2 On / Off Events per Day
- 12 Programmable Special Days with 2 On / Off Events per Day
- Daylight Saving Time Function
- Indoor Coil Freeze Protection / Auto Defrost Operation
- HP / LP Safety Protection
- PI Compressor Algorithm (Proportional Band + Time Integral)
- Compressor Operating Envelope Control
- Compressor Discharge Temp. Control and Run Time Management
- Alarm Fault Data Logger
- LCD Screen Displays Operating Status, Mode and Menu Information

UNIT & CONTROL OPTIONS

- ActronAir CP05 Control Interface (BCA Compliant)
- BMS Compatibility
- 3rd Party Control
- (10) Economy Cycle Dampers and Motors (Bottom Return Air Only)
- Various Supply Air / Return Air Configuration options
- Reheat / Dehumidification

UNIT COMPLIANCE

- BCA Sec. J5.4 Min. EER Compliant
- Demand Response AS4755.3.1
- AS/NZS CISPR 11:2011 (Group 1 Class A)
- AS/NZS 3100:2002 Approval and Test Spec - General Req. Electrical Equipment

SPECIFICATION SUMMARY

PACKAGE UNIT MODEL	PKV2000T	
	(1) TOTAL	(2) NETT
(3) COOLING CAPACITY (kW)	195.50	187.50
(3) SENSIBLE CAPACITY (kW)	158.00	150.00
(4) HEATING CAPACITY (kW)	202.10	210.00
(5) COOLING INPUT POWER (kW)	61.75	
(5) HEATING INPUT POWER (kW)	59.60	
EER	3.17	3.04
COP	3.39	3.52
(6) INDOOR AIRFLOW (l/s) - MIN. / NOMINAL / MAX.	7920 / 9900 / 11200	
(7) OUTDOOR SOUND PRESS. LEVEL @ 3M dB(A) - HIGH / MAX.	66.2 / 66.2	
OUTDOOR SOUND POWER LEVEL dB(A) - HIGH / MAX.	83.2 / 83.2	
POWER SUPPLY	400V / 3Ph+N / 50Hz	
(2) RATED LOAD AMPS	86.0	
(8) FULL LOAD AMPS	117.0	
(9) MAINS CIRCUIT BREAKER SIZE	125.0 A	
MAXIMUM INRUSH CURRENT	18.0 A	
POWER FACTOR (Minimum)	0.92	
WEIGHT - UNIT / PACKAGE (kg)	3012 / 3086	

(1) Based on unit rating excluding indoor fan kW.
(2) Measured and tested in accordance with AS/NZS 3823.1.2.
(3) At 27°C DB / 19°C WB entering air temperatures and 35°C ambient.
(4) At 20°C DB entering air temperature and 7°C DB / 6°C WB ambient.
(5) Total input power excludes indoor fan kW.
Nett input power includes indoor fan kW.
(6) Max. - Min. airflow application range.
(7) Outdoor sound pressure level is determined in an anechoic chamber and may differ once the unit is installed due to environment conditions.
(8) Full Load Amps are based on compressor and fan motors' maximum expected current.
(9) See Specifications sheet for Mains Circuit Breaker size details.
(10) Return Air Sensor needs to be relocated by the installer specific to site requirements.

Note: Use input power to estimate running cost.

ActronAir

ActronAir is constantly seeking ways to improve the design of its products, therefore specifications are subject to change without notice.
Please check prior to purchase. Copyright © 2017 Actron Engineering Pty. Ltd.

CAPACITY SELECTION DATA

PKV2000T

COOLING PERFORMANCE

AIR ENTERING OUTDOOR DB - °C	AIR ENTERING INDOOR WB - °C	TOTAL CAPACITY kW	TOTAL SENSIBLE CAPACITY - kW AT DB TEMPERATURE ONTO INDOOR COIL - °C 20	21	22	23	24	25	26	27	28	29	30
25	16	202.41	129.74	140.05	149.02	159.19	168.82	178.34					
	17	206.95	118.98	129.72	139.92	150.48	159.03	168.86	178.50				
	18	212.30	107.86	118.70	129.48	139.78	150.16	158.85	168.84	178.52	188.13		
	19	218.31	96.55	107.68	118.40	129.25	139.65	149.89	158.65	168.54	178.37	187.87	197.49
	20	224.57	85.18	96.27	107.15	118.00	128.78	139.35	149.62	158.31	168.45	178.27	187.77
	21	230.29		84.63	95.62	106.90	117.63	128.37	138.92	149.29	159.41	168.16	178.02
	22	237.03			83.98	95.08	106.13	117.10	127.95	138.39	148.94	159.00	167.64
30	16	192.17	124.94	135.21	144.17	154.07	163.89	173.14					
	17	197.06	114.33	124.87	135.16	144.05	154.13	163.97	173.33				
	18	201.90	103.23	114.06	124.71	135.12	145.25	153.98	163.68	173.30	182.72		
	19	207.45	92.13	103.07	113.83	124.42	134.80	144.89	153.67	163.61	173.21	182.77	
	20	213.03	80.52	91.65	102.65	113.50	124.16	134.54	144.78	153.35	163.41	173.22	182.67
	21	218.70		80.16	91.20	102.18	112.90	123.58	134.11	144.43	153.02	162.96	172.75
	22	224.60			79.48	90.67	101.55	112.33	123.23	133.67	143.89	153.93	162.51
35	16	182.88	119.60	129.86	138.74	148.55	158.14	167.24					
	17	186.02	109.15	119.55	129.76	138.58	148.50	158.29	167.56				
	18	190.43	98.12	108.93	119.37	129.59	138.34	148.44	158.11	167.67			
	19	**195.50**	86.97	97.95	108.62	119.19	129.34	139.59	148.22	**158.00**	167.58	176.95	
	20	200.46	76.08	86.94	97.40	107.58	118.33	128.40	138.98	147.86	158.10	168.01	178.26
	21	205.83		75.34	86.08	96.32	107.24	117.78	128.44	138.84	147.70	158.02	168.64
	22	211.31			74.48	85.00	96.04	106.70	117.71	128.38	138.83	147.59	158.47
40	16	172.46	114.48	124.25	132.55	141.48	150.97						
	17	173.61	104.08	114.04	123.84	131.63	141.57	151.06					
	18	177.72	93.11	103.53	113.56	122.92	131.64	141.36	151.53	161.25			
	19	182.15	82.02	92.56	102.94	112.54	122.77	131.36	141.61	151.80	161.48		
	20	186.62	70.60	81.38	92.03	102.05	112.47	122.54	131.60	141.70	151.88	161.73	171.96
	21	191.46		69.89	80.58	90.97	101.76	112.01	122.49	132.97	141.73	151.89	162.38
	22	196.37			69.20	79.54	90.50	101.09	112.11	122.52	132.75	141.74	152.16
45	16	160.58	107.78	116.47	125.80	134.47							
	17	160.65	97.71	107.45	116.02	124.94	134.68	143.87					
	18	163.56	86.90	97.29	107.03	116.33	125.03	134.48	144.39				
	19	167.30	75.90	86.42	96.73	106.14	116.15	124.79	134.82	144.75	154.28		
	20	171.18	64.61	75.26	85.09	95.68	106.00	115.83	124.94	134.83	144.73	154.36	
	21	175.97		63.94	74.67	84.90	95.56	105.74	115.97	124.92	134.94	144.77	155.03
	22	179.83			63.28	73.73	84.51	95.00	105.59	115.86	124.87	134.88	145.20
50	16	145.96	100.27	108.38	118.33	126.67							
	17	147.68	90.27	100.39	107.85	117.50	126.96						
	18	149.40	79.80	90.60	100.00	109.11	117.72	126.76					
	19	152.45	68.96	80.04	90.06	99.24	108.92	117.45	127.14	136.72			
	20	155.73	57.77	69.08	77.92	88.90	99.00	108.51	117.51	127.07	136.57		
	21	160.48		58.08	68.67	78.62	88.94	98.93	108.79	116.40	127.32	137.51	147.45
	22	163.28			57.45	67.82	88.92	88.48	98.54	108.55	116.43	127.73	138.08

HEATING PERFORMANCE

WB TEMP ON OD COIL- °C	HEATING CAPACITY - kW AT DB ENTERING INDOOR - °C 16 TH	16 IH	18 TH	18 IH	20 TH	20 IH	22 TH	22 IH	24 TH	24 IH
-10	127.33	119.69	126.61	119.01	125.97	118.42	125.26	117.75	124.54	117.07
-8	136.89	127.31	136.12	126.59	135.42	125.94	134.65	125.23	133.86	124.49
-6	146.45	134.74	145.63	133.98	144.87	133.28	144.04	132.52	143.18	131.73
-4	156.01	139.63	155.14	138.85	154.32	138.12	153.43	137.32	152.51	136.49
-2	165.58	144.05	164.65	143.24	163.77	142.48	162.82	141.66	161.83	140.79
0	175.14	150.62	174.16	149.77	173.22	148.97	172.21	148.10	171.15	147.19
2	184.33	164.06	183.35	163.18	182.21	162.17	181.12	161.20	179.96	160.16
4	194.25	184.54	193.19	183.53	192.03	182.42	190.73	181.19	189.44	179.96
6	204.61	204.61	203.42	203.42	**202.10**	**202.10**	200.78	200.78	199.28	199.28
8	215.39	215.39	214.01	214.01	212.56	212.56	211.06	211.06	209.48	209.48
10	226.26	226.26	224.71	224.71	223.08	223.08	221.37	221.37	219.58	219.58
12	237.81	237.81	236.08	236.08	234.24	234.24	231.75	231.75	230.33	230.33
14	249.16	249.16	247.19	247.19	245.01	245.01	243.04	243.04	241.41	241.41
16	261.46	261.46	259.31	259.31	257.05	257.05	255.32	255.32	252.83	252.83
18	274.20	274.20	271.82	271.82	269.98	269.98	267.33	267.33	264.02	264.02

TH - Total Heating Capacity (kW).
IH - Integrated Heating Capacity (kW) Includes defrost losses.

AIRFLOW CORRECTION MULTIPLIER

% VARIATION	-20%	-15%	-10%	-5%	NOMINAL	5%	10%	13.13%
INDOOR AIRFLOW (l/s)	7920	8415	8910	9405	**9900**	10395	10890	11200
TOTAL COOLING	0.961	0.970	0.982	0.990	**1.000**	1.008	1.015	1.019
SENSIBLE COOLING	0.892	0.918	0.947	0.974	**1.000**	1.025	1.05	1.065
HEATING FACTOR	0.986	0.989	0.994	0.997	**1.000**	1.003	1.005	1.006

NOTES:
1. No allowance has been made for the effect of indoor fan motor.
2. Selection tables are based on nominal airflows. Correction factors must be applied for selection away from these conditions.

ActronAir is constantly seeking ways to improve the design of its products, therefore specifications are subject to change without notice.
Please check prior to purchase. Copyright © 2017 Actron Engineering Pty. Ltd.

INDOOR FAN CURVE

PKV2000T

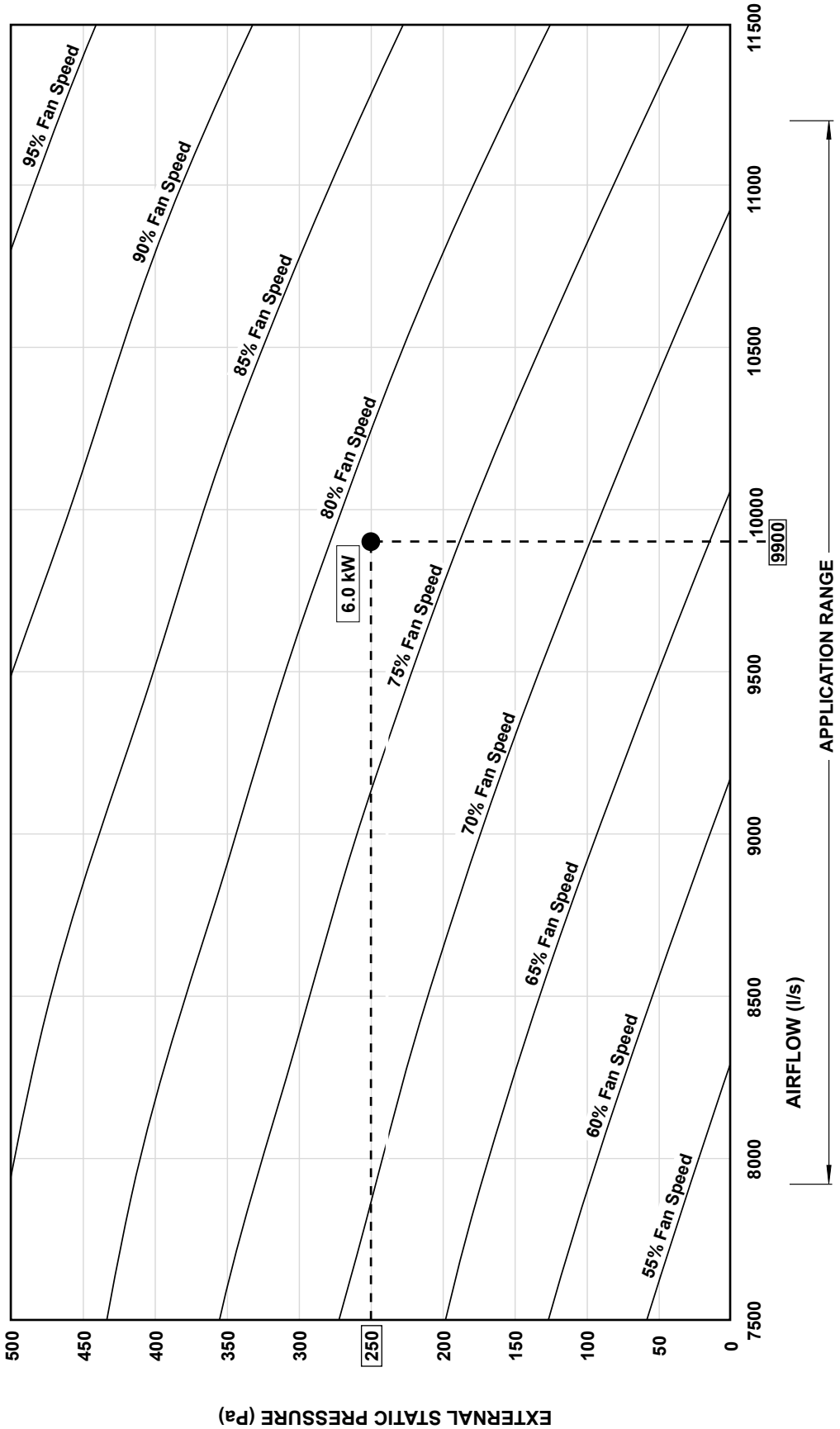

NOTES:

This Fan Curve shows the relationship between Airflow Volume (l/s), Fan Speed % and External Static Pressure.

Example: Airflow of 9,900 l/s with Ext. Static Press of 250 Pa will require 78.6 % Fan Speed.

For Internal Sensors Control, set Airflow Volume (l/s) on the Control Interface via Service Menu, as follows:

G. Service Menu ⟶ **f**. Service settings ⟶ **c**. Thermoregulation ⟶ **Gfc4** Supply Air Volume Setpoint

For External Inputs or BMS Demand, set the corresponding (0-10V or 0-100%) inputs for the required % Fan Speed.

195.50 kW

3 Phase | **Hercules**

ActronAir is constantly seeking ways to improve the design of its products, therefore specifications are subject to change without notice.
Please check prior to purchase. Copyright © 2017 Actron Engineering Pty. Ltd.

INDOOR FAN DATA

PKV2000T

195.50 kW	
3 Phase	Hercules

AIRFLOW (l/s)	EXTERNAL STATIC PRESSURE (Pa)																			
	50		100		150		200		250		300		350		400		450		500	
	% Speed	kW	% Speed	kW	% Speed	kW	% Speed	kW	% Speed	kW	% Speed	kW	% Speed	kW	% Speed	kW	% Speed	kW	% Speed	kW
7920	56.7	2.22	60.2	2.69	63.5	3.20	66.9	3.74	70.3	4.33	73.3	4.96	76.3	5.59	79.3	6.19	82.3	6.92	85.2	7.66
8000	57.1	2.26	60.6	2.74	63.9	3.25	67.2	3.79	70.6	4.38	73.6	5.02	76.6	5.65	79.5	6.25	82.5	6.99	85.4	7.72
8500	59.8	2.53	63.1	3.10	66.3	3.63	69.4	4.12	72.5	4.76	75.6	5.43	78.5	6.05	81.3	6.71	84	7.43	86.8	8.16
9000	62.4	2.88	65.6	3.49	68.7	3.99	71.7	4.56	74.6	5.17	77.5	5.81	80.5	6.50	83.2	7.23	85.8	7.93	88.4	8.62
9500	65.2	3.26	68.2	3.85	71.1	4.43	74	5.03	76.8	5.62	79.7	6.24	82.4	6.99	85.1	7.75	87.7	8.44	90.3	9.16
9900	67.4	3.56	70.4	4.17	73.2	4.83	75.9	5.43	78.6	6.00	81.4	6.67	84	7.39	86.7	8.15	89.3	8.88	91.7	9.65
10000	68	3.64	70.9	4.25	73.7	4.93	76.4	5.53	79.1	6.09	81.8	6.77	84.4	7.49	87.1	8.25	89.7	8.99	92.1	9.77
10500	70.8	4.05	73.5	4.74	76.3	5.43	78.9	6.03	81.5	6.68	84	7.34	86.6	8.05	89.2	8.78	91.6	9.57	94	10.41
11000	73.8	4.58	76.3	5.25	78.9	5.95	81.4	6.63	83.9	7.31	86.4	7.98	88.8	8.62	91.2	9.36	93.6	10.20	95.8	10.69
11200	74.9	4.77	77.4	5.45	80	6.18	82.4	6.89	84.9	7.58	87.4	8.23	89.8	8.91	92.1	9.65	94.4	10.45	96.5	11.00

NOTES:

Airflow = Supply Airflow, L/s
(Value is set on the Control Interface via G. Service Menu*).
Set Static = Supply Air Pressure, Pa.
% Speed = Corresponding Indoor Fan Speed at Set Static.
kW = Indoor Fan Power, kilowatts
[ ] - Data in the box indicates values at selected Airflow.
Performance Fan Data shown is at Dry Coil Condition and without air filters.
For system with Re-Heat Coil, please see page 10 for Re-Heat Coil pressure drop.

*** NOTE:** Set the Airflow on the Control Interface as follows:
G. Service Menu ⟶ **f**. Service settings ⟶ **c**. Thermoregulation ⟶ **Gfc4** Supply Air Volume Setpoint

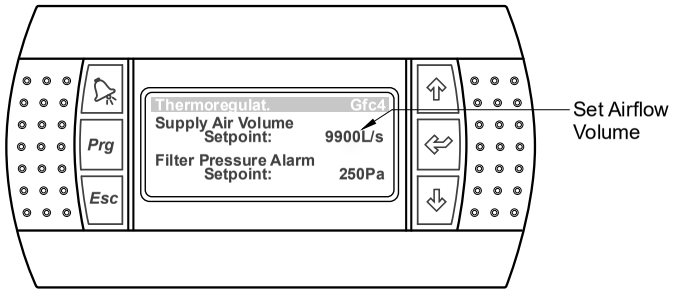

ActronAir

ActronAir is constantly seeking ways to improve the design of its products, therefore specifications are subject to change without notice.
Please check prior to purchase. Copyright © 2017 Actron Engineering Pty. Ltd.

PACKAGE UNIT DIMENSIONS

PKV2000T

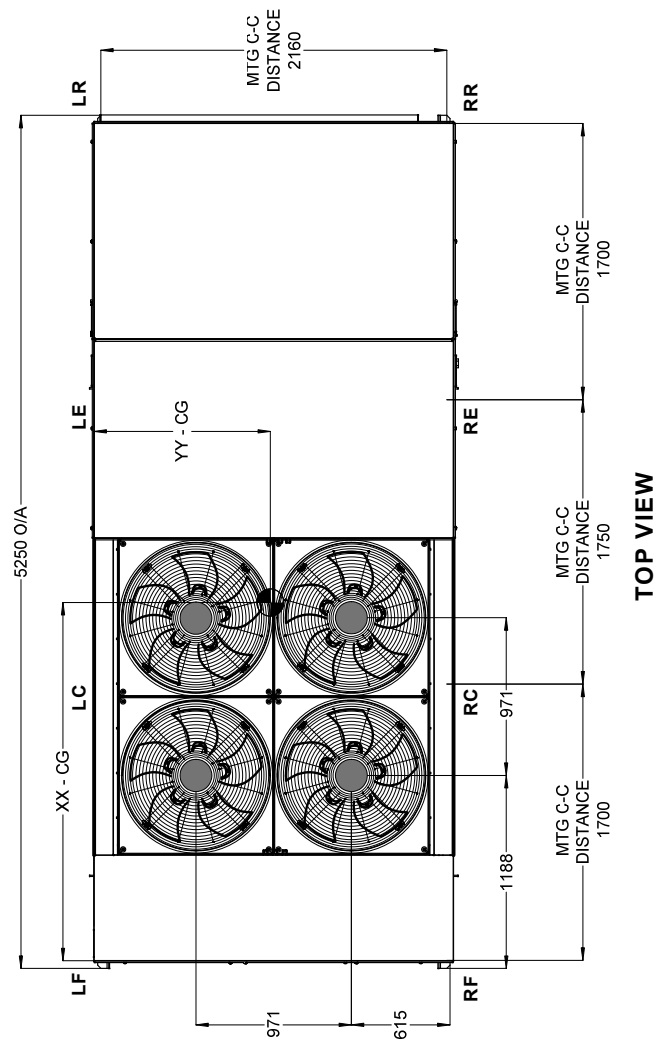

TOP VIEW

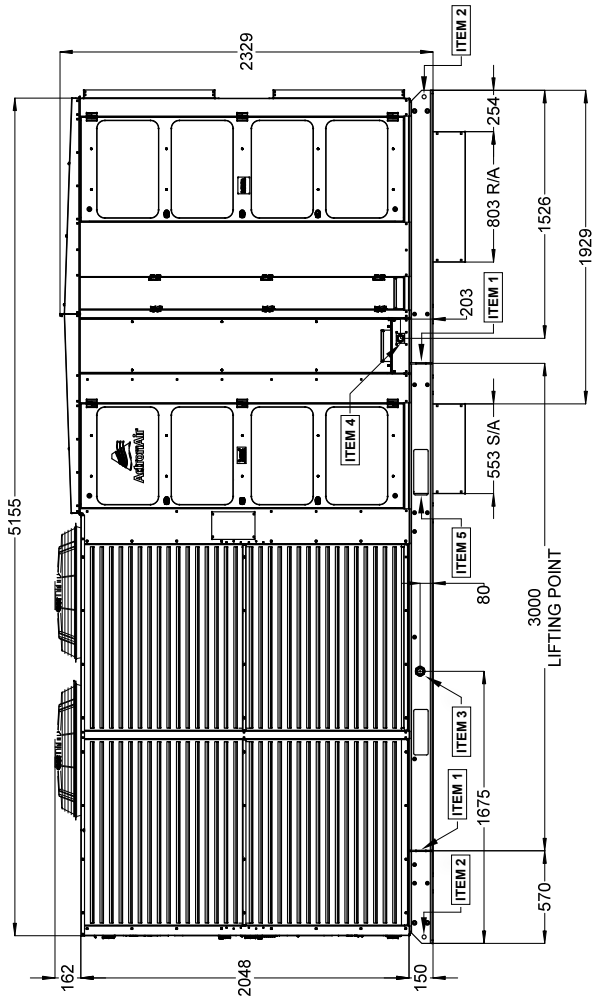

SIDE VIEW

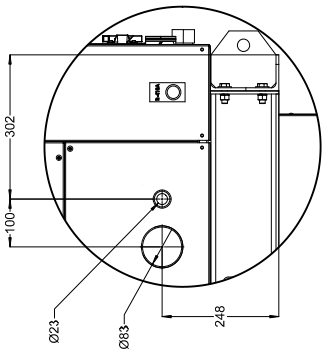

DETAIL A
ELECTRICAL ACCESS

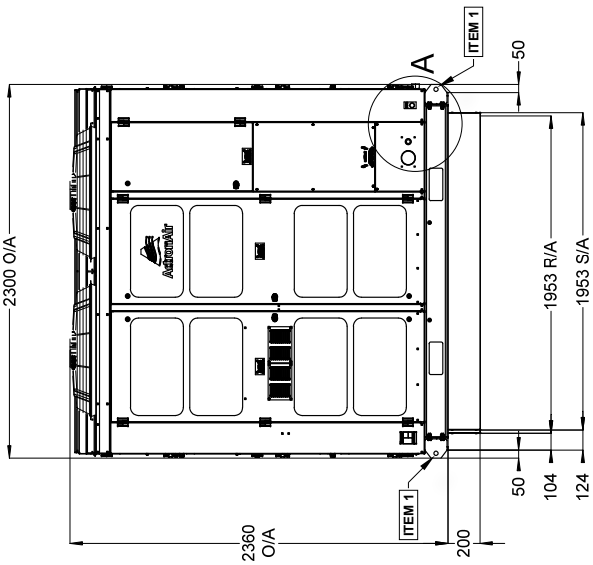

FRONT VIEW

DIMENSION (H x W x D) = 2360 x 5250 x 2300
SUPPLY DUCT (W x L) = 553 x 1953
RETURN DUCT (W x L) = 803 x 1953
USE M14 BOLT FOR FEET MOUNTING
DO NOT SCALE DRAWING.
ALL DIMENSIONS ARE IN MM UNLESS SPECIFIED.

THIRD ANGLE PROJECTION

DENOTES CENTRE OF GRAVITY (CG)

	DESCRIPTIONS
ITEM 1	LIFTING HOLES 4 x 26 mm (MAIN LIFTING POINTS)
ITEM 2	LIFTING HOLES 4 x 26 mm (SECONDARY OPTIONAL)
ITEM 3	OUTDOOR SECTION CONDENSATE DRAIN COUPLING 2 X 31.8 (1-1/4") BSP FEMALE SOCKET
ITEM 4	INDOOR SECTION CONDENSATE DRAIN BRASS CONNECTOR 31.8 (1-1/4") BSP FEMALE THREAD
ITEM 5	FORKLIFT TINE HOLES 280 x 90 mm (2 EACH LH & RH SIDE)

3 Phase | Hercules

195.50 kW

ActronAir

ActronAir is constantly seeking ways to improve the design of its products, therefore specifications are subject to change without notice.
Please check prior to purchase. Copyright © 2017 Actron Engineering Pty. Ltd.

SERVICE ACCESS AREAS AND AIRFLOW CLEARANCES

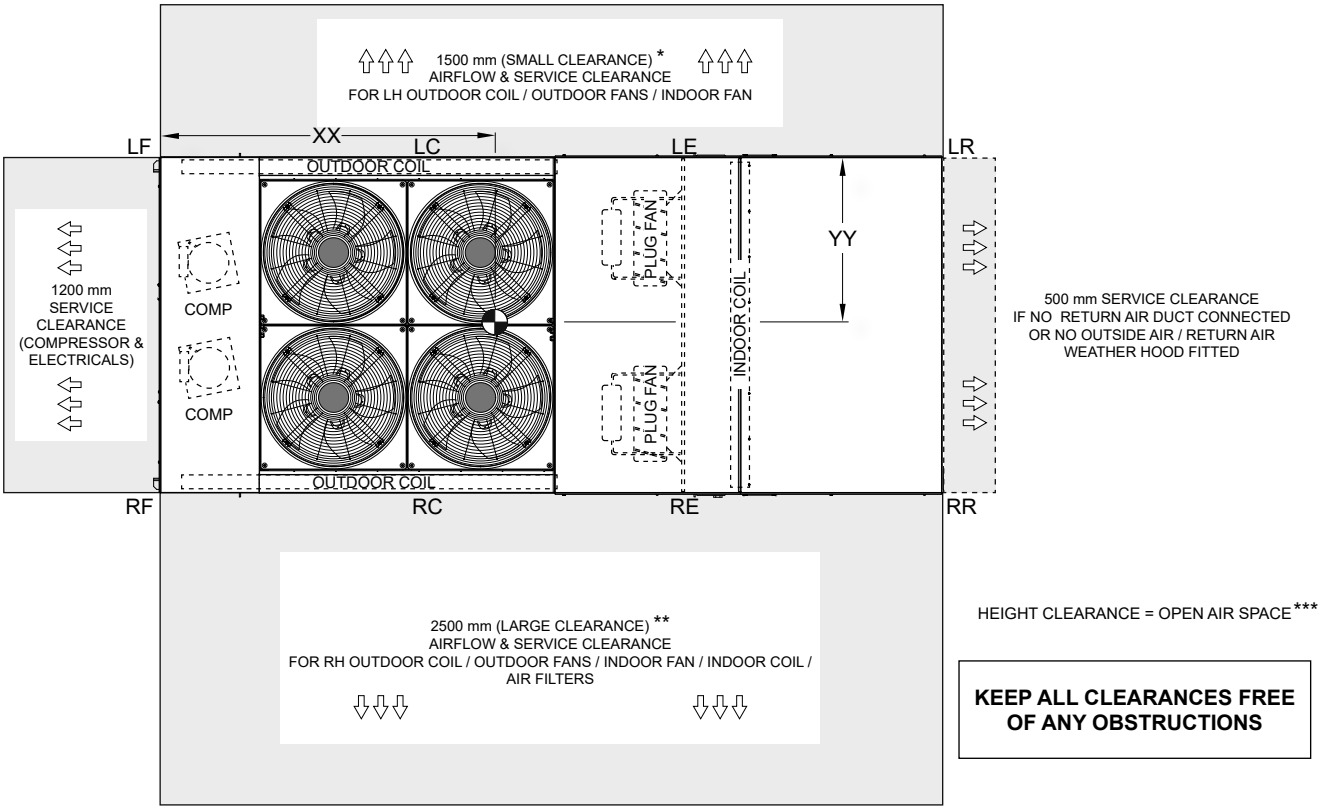

HEIGHT CLEARANCE = OPEN AIR SPACE ***

KEEP ALL CLEARANCES FREE OF ANY OBSTRUCTIONS

* AIRFLOW CLEARANCE OF 1500mm IS FOR OPEN AIR SPACE INSTALLATION, A MINIMUM OF 2500mm AIRFLOW CLEARANCE MUST BE PROVIDED FOR CLOSE SPACE AREAS WITH WALLS HIGHER THAN THE UNIT. **PLEASE NOTE THAT UNDER ALL CIRCUMSTANCES, CONDENSER AIR MUST NOT RECIRCULATE BACK ONTO CONDENSER COIL.**

** PREFERRED SERVICE ACCESS FOR INDOOR COIL. SHOULD SERVICE ACCESS BE REQUIRED ON THE OPPOSITE SIDE, THE TWO SIDE CLEARANCES WILL SWAP WITH THE SAME CONDITION APPLIED FOR SMALL CLEARANCE SIDE.

*** MINIMUM HEIGHT CLEARANCES FOR INSTALLATION WITH LIMITED HEIGHT CLEARANCE ARE AS FOLLOWS:
1500mm, IF 2500mm SERVICE CLEARANCE FOR INDOOR COIL IS AVAILABLE ON BOTH SIDES OF THE UNIT.
2500mm, IF 2500mm SERVICE CLEARANCE FOR INDOOR COIL IS NOT AVAILABLE ON EITHER SIDE OF THE UNIT.

UNIT AIR HANDING CONFIGURATION	NO. OF POINTS	UNIT WEIGHT (kg)	PACKAGE WEIGHT (kg)	SUGGESTED ANCHOR POINTS WEIGHT DISTRIBUTION (kg)								CENTRE OF GRAVITY (mm)	
				LF	LC	LE	LR	RF	RC	RE	RR	XX	YY
DOWN DISCHARGE	8	3012	3086	487	440	324	264	483	434	319	261	2132	1096

UNIT BASE DIMENSIONS

● Applicable to units with Down Supply and Bottom Return Air Handing configuration only.

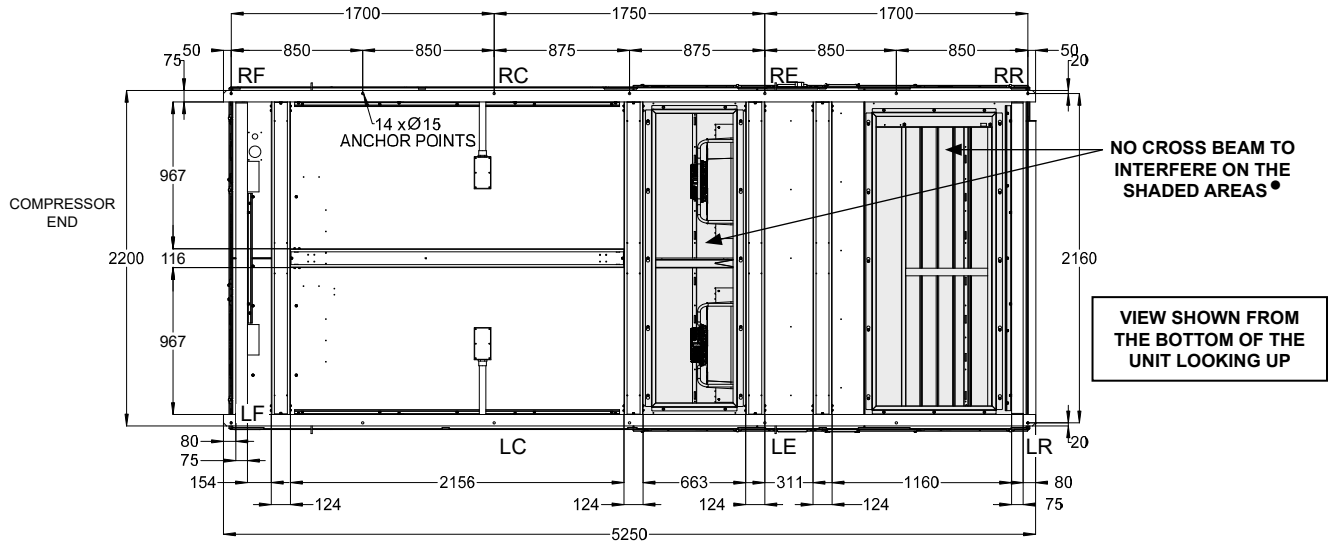

NOTES:
1. All dimensions are in mm unless specified. Do not scale drawing.
2. Refer to corresponding unit dimensional drawing for mounting hole details.
3. Drawings are available on ActronAir website, please contact ActronAir Technical Support for further information on 1800 119 229.

ActronAir is constantly seeking ways to improve the design of its products, therefore specifications are subject to change without notice.
Please check prior to purchase. Copyright © 2017 Actron Engineering Pty. Ltd.

Outdoor Radiated

Sound Power Level (SWL) | **Sound Pressure Level (SPL)**

Airflow Settings	Sound Power Level dB(A)	Octave Band Centre Frequency (Hz), dB							Sound Pressure Level dB(A) at 3m
		125	250	500	1k	2k	4k	8k	
High *	83.2	84.4	79.4	80.6	77.5	74.6	72.7	70.7	66.2
Maximum **	83.2	84.4	79.4	80.6	77.5	74.6	72.7	70.7	66.2

***** Measured at Standard Rated Condition, 35°C ambient.
****** Measured at extreme ambient condition.

Indoor Outlet

Sound Power Level (SWL) | **Sound Pressure Level (SPL)**

Airflow Settings	Nominal Airflow Li/s	Sound Power Level dB(A)	Octave Band Centre Frequency (Hz), dB							Sound Pressure Level dB(A) at 3m
			125	250	500	1k	2k	4k	8k	
Minimum	7920	82.6	71.5	76.1	78.8	78.1	76.2	70.7	68.5	65.6
Nominal	9900	87.5	76.3	80.9	83.6	81.9	82.1	75.8	75.1	70.5
Maximum	11200	90.9	79.7	84.3	87.0	85.3	85.5	79.2	78.5	73.9

OUTDOOR RADIATED

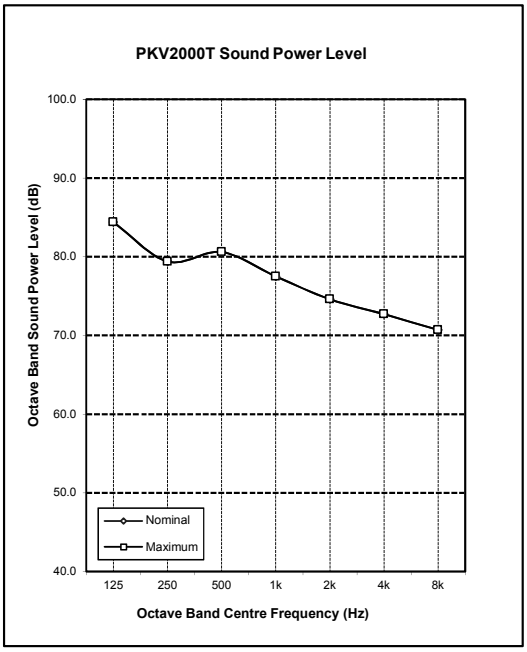

INDOOR OUTLET

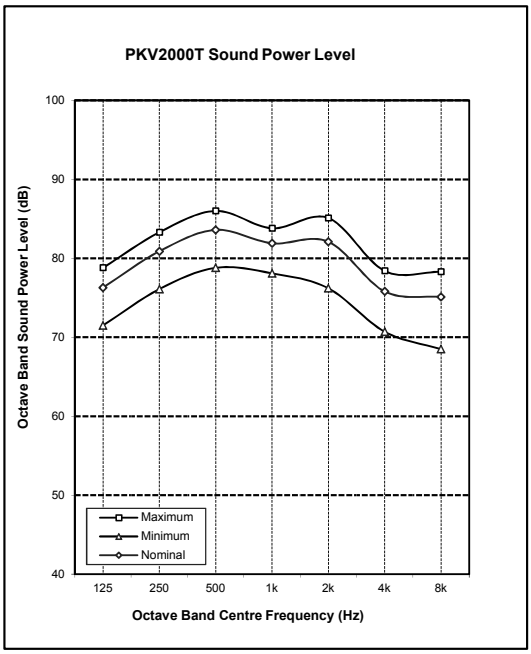

NOTE:
Radiated sound power levels are based on ISO 3743-1

ActronAir is constantly seeking ways to improve the design of its products, therefore specifications are subject to change without notice.
Please check prior to purchase. Copyright © 2017 Actron Engineering Pty. Ltd.

REHEAT COIL PRESSURE DROP

PKV2000T

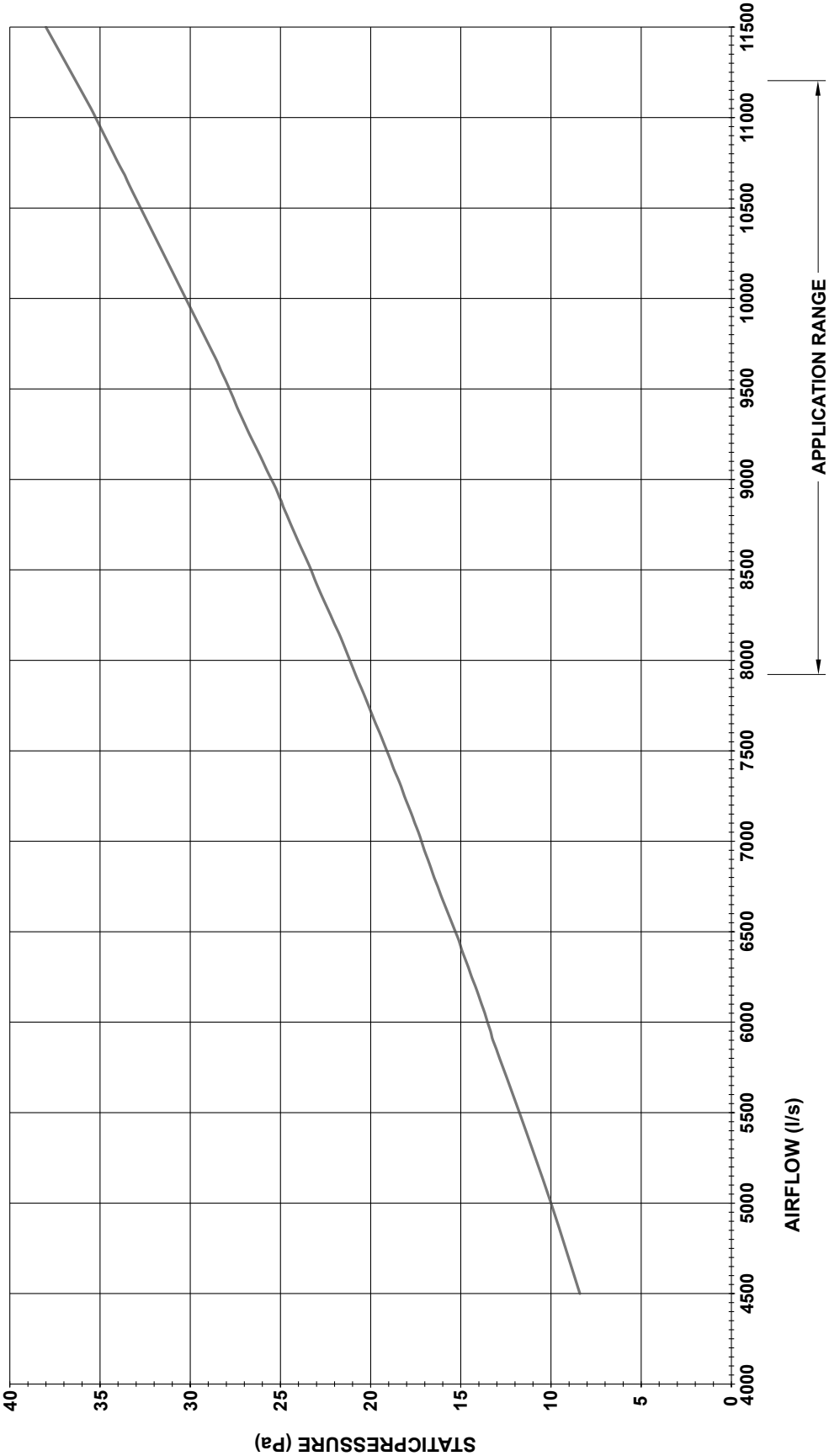

195.50 kW

3 Phase | Hercules

ActronAir

ActronAir is constantly seeking ways to improve the design of its products, therefore specifications are subject to change without notice.
Please check prior to purchase. Copyright © 2017 Actron Engineering Pty. Ltd.

SPECIFICATIONS

PKV2000T

CONSTRUCTION

CABINET	Top / Side Panels	1.2 mm Galvanised Steel
		1.15 mm Galvanised Steel
	Base Panel	1.6 mm Galvanised Steel
CHASSIS	C Channel / Hot Rolled	150 x 75 x 6 mm Hot Dipped Galv. Steel
	Bracket	1.9 mm Galvanised Steel
SURFACE FINISH		65 *µm* Baked Polyester Powder Coat

INSULATION

TYPE	Evaporator Section	PE Foil Faced Insulation

SOUND LEVEL * dB(A)

SOUND PRESS. - High / Max	66.2 / 66.2
SOUND POWER LEVEL - High / Max	83.2 / 83.2

* Sound data is based on the outdoor fan's manufacturer sound level data.

ELECTRICAL

POWER SUPPLY - 50 Hz	400 Volts x 3 Phase + Neutral
VOLTAGE RANGE (min - max)	380 V - 440 V
FULL LOAD AMPS * - Phase 1	117.0
FULL LOAD AMPS * - Phase 2 & 3	115.0 / 115.0
RATED LOAD AMPS**	86.0
MAXIMUM INRUSH CURRENT	18.0
IP RATING	IP44

IMPORTANT - The local electricity authority may require limits on starting current and voltage drop, please check prior to purchase.

* Full Load Amps are based on Compressor and Fan Motor's maximum expected current.

** Rated Load Amps are measured and tested in accordance with AS/NZS3823.1.2.

CIRCUIT BREAKER SIZE - MAXIMUM

MAINS CIRCUIT BREAKER SIZE	125 A (195kW)

For minimum cable size, please refer to the latest edition of the AS/NZS 3000 "Australian/New Zealand Wiring Rules" and AS/NZS 3008 "Electrical Installations - Selection of Cables, Part 1: Cables for alternating voltages up to and including 0.6/1kV" for more details.

OUTDOOR COIL

TUBE TYPE	Copper - Rifle Bore
FIN TYPE	Aluminium - Wave
FACE AREA (m sqr)	4.78 x 2
FIN SPACING (per m)	551
COIL COATING	Blue Hydrophilic Coat Coil Fin Protection

OUTDOOR FAN

TYPE x NUMBER OF FANS	EC Axial Fan x 4
NUMBER OF BLADES PER FAN	5
INPUT kW (each)	2.46
MOTOR TYPE / DRIVE TYPE	Variable Speed EC Motor / Direct Drive
FAN SPEED CONTROL	Electronic Control

The standard EC outdoor fans fitted to this unit will accept up to 80Pa External Static Pressure.

INDOOR COIL

TUBE TYPE	Copper - Rifle Bore
FIN TYPE	Aluminium - Louvre
FACE AREA (m sqr)	4.00 (face split)
FIN SPACING (per m)	551
COIL COATING	Blue Hydrophilic Coat Coil Fin Protection

INDOOR FAN

TYPE x NUMBER OF FANS	Backward Curve Plug Fan x 4
INPUT kW (each)	2.0
MOTOR TYPE / DRIVE TYPE	Variable Speed EC Motor / Direct Drive
FAN SPEED CONTROL	Electronic Control

REHEAT COIL (OPTIONAL)

TUBE TYPE	Copper -Rifle Bore
FACE AREA (m sqr)	4.00
COIL COATING	Blue Hydrophilic Coat Coil Fin Protection +Complete Coil Treatment

COMPRESSOR

TYPE x NUMBER PER UNIT		Variable Speed Scroll (Hermetic) x 2
FULL LOAD AMPS (each)		48.1 A
MAX. MUST TRIP AMPS (each)		60.0A (Overload)
STARTING METHOD		Soft Start
MOTOR PROTECTION		Over-Current, Over-Modulation Protect.
REFRIGERANT OIL	Type	POE Lubricant
	Charge (per comp.)	6.7 liters

REFRIGERATION SYSTEM

REFRIGERANT TYPE	R-410A
EXPANSION CONTROL- (Type x Number per unit)	Bi-Flow EXV (Electronic Expansion Valve) x 2
FACTORY CHARGE (per comp.)	28,000 grams

PROTECTION DEVICES

HIGH PRESSURE CUTOUT SWITCH	Non-adjustable (Automatic Reset)
LOW PRESSURE CUTOUT SWITCH	Non-adjustable (Automatic Reset)
COMPRESSOR MOTOR TEMP.	Internal Thermal Cut-Out
INDOOR FAN OVERLOAD	Full Electronic Monitoring
OUTDOOR FAN OVERLOAD	Internal Thermal Cut-Out
HIGH DISCHARGE TEMP. PROTECT.	Compressor Drive Controlled
SUMP HEATER WATTS (each comp.)	75

ELECTRIC CONTROLS

DEFROST METHOD	Reverse Cycle
DEFROST TYPE	Electronic Control
CONTROL CIRCUIT BREAKER	10.0 A
OPTIONAL THIRD PARTY CONTROLLER INPUTS	MODBUS 485 BACNET 485 BACNET TCP / IP

OPERATING RANGE

It is essential that the unit is correctly sized for the application and operates within its recommended range of operating conditions as shown below.

MODE		RANGE	INDOOR AIR INTAKE TEMPERATURE	OUTDOOR AIR INTAKE TEMPERATURE
Cooling		Max.	30°C DB / 22°C WB	50°C DB
		Min.	20°C DB / 16°C WB	15°C DB
Heating		Max.	24°C DB	19.5°C DB / 18°C WB
		Min.	16°C DB	-10°C WB
Low Ambient Cooling	Std.	Max.	29°C DB / 19°C WB	50°C DB
		Min.	20°C DB / 15°C WB	-5°C DB to 5°C DB

AIR FILTER PROVISION

All return air, including outside air, must have adequate filters supplied and fitted by the installing contractor. Return Air Filters are to be located in the return air filter retainer in the unit or in accessible location between the return air grille and the unit.

No outside air filter retainer has been provided in the unit.

AIR FILTER RAILS FITTED (Filters not Supplied)

AIR FILTER DISPOSABLE - 2 small + 2 large air filters per row (Not Supplied)

AIR FILTERS (Small)	Material	30/30 Pleated Cotton Synthetic Blend - G4
	Size - H x W x T	495 x 495 x 95 (actual air filter dimensions)
	Quantity	8 pcs.
AIR FILTERS (Large)	Material	30/30 Pleated Cotton Synthetic Blend - G4
	Size - H x W x T	495 x 594 x 95 (actual air filter dimensions)
	Quantity	8 pcs.

ActronAir

ActronAir is constantly seeking ways to improve the design of its products, therefore specifications are subject to change without notice.
Please check prior to purchase. Copyright © 2017 Actron Engineering Pty. Ltd.

WIRING DIAGRAM

PKV2000T

195.50 kW

3 Phase | Hercules

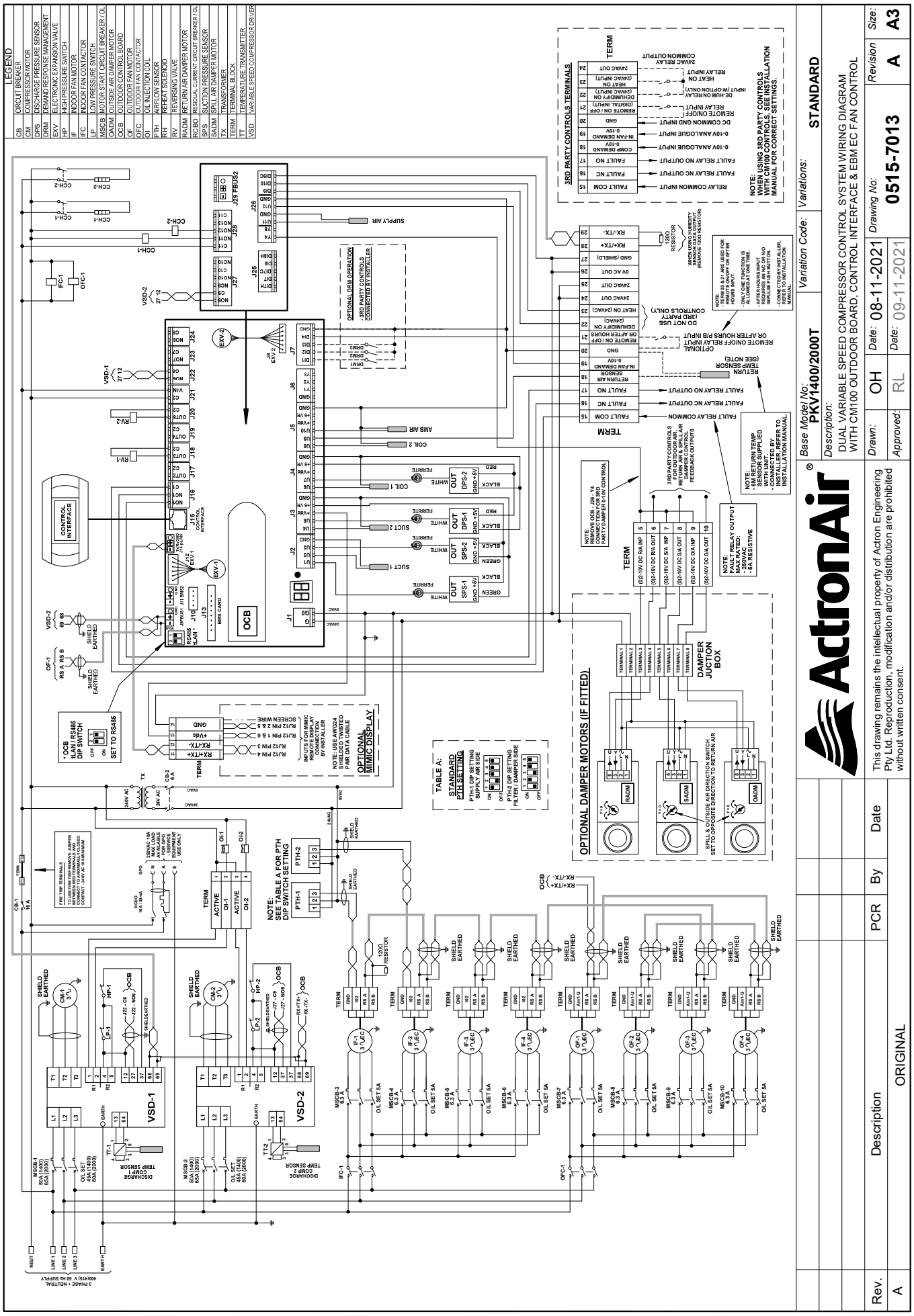

NOTES:

- ONLY AIR HANDING SECTION OF THE UNIT IS SHOWN.
- ALL VIEWS ARE SHOWN FROM THE RETURN AIR END OF THE UNIT.
- ALL FLANGES ARE OUTSIDE DIMENSIONS.
- ALL FLANGES ARE RAW EDGE EXCEPT FOR DOWN SUPPLY (D-OPTION) AND DOWN RETURN (B-OPTION) WHICH HAVE A 26mm RETURN FLANGE (PLEASE SEE DETAILS).

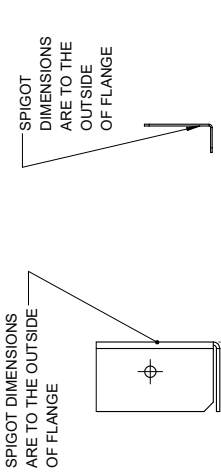

DOWN SUPPLY & DOWN RETURN FLANGE DETAIL

RAW EDGE FLANGE DETAIL

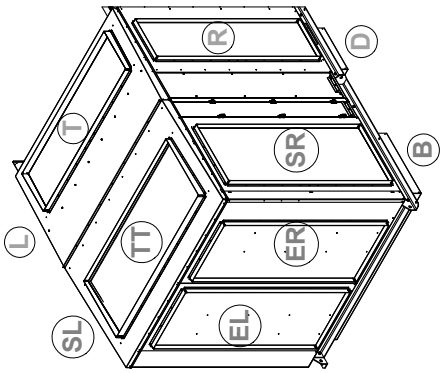

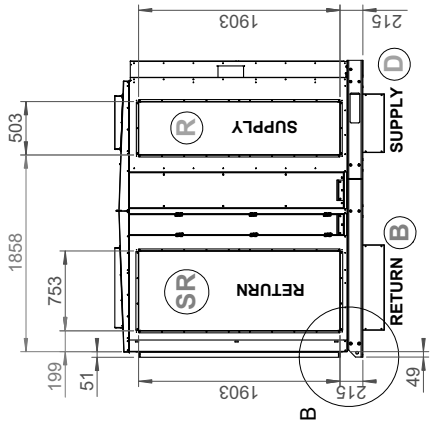

RH SIDE

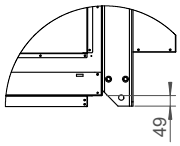

DETAIL B

DETAIL C

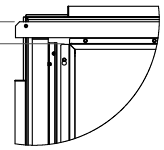

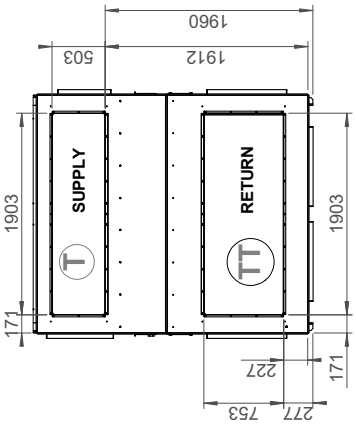

TOP VIEW

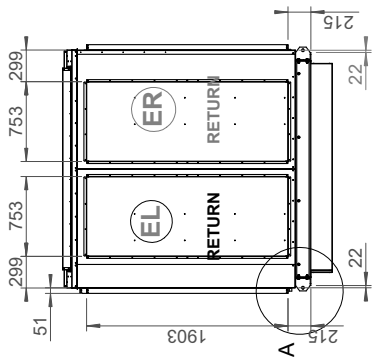

END VIEW

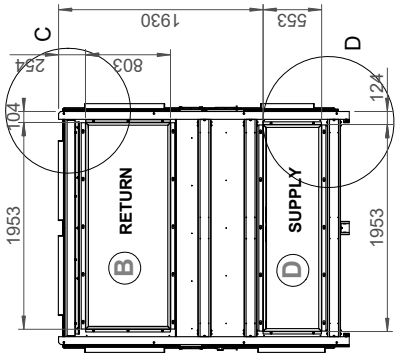

BOTTOM VIEW

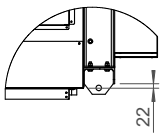

DETAIL A

DETAIL D

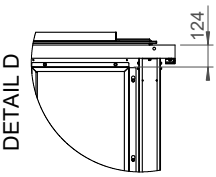

LEGEND FOR SUPPLY POSITIONS

D=DOWN SUPPLY	1953 x 553
L=LEFT HAND SUPPLY	1503 x 633
R=RIGHT HAND SUPPLY	1903 x 503
T=TOP SUPPLY	1903 x 503

LEGEND FOR RETURN POSITIONS

B =BOTTOM RETURN	1953 x 803
EL=LH VERTICAL RETURN	1903 x 753
ER=RH VERTICAL RETURN	1903 x 753
SL=LH SIDE RETURN	1903 x 753
SR=RH SIDE RETURN	1903 x 753
TT=TOP RETURN	1903 x 753

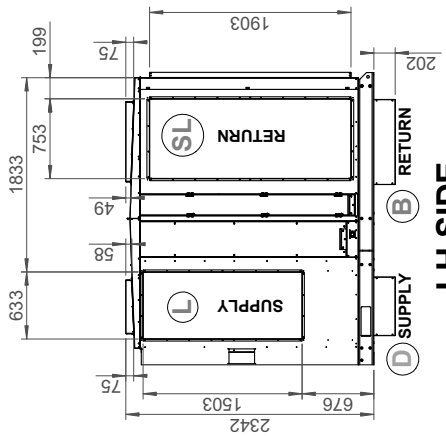

LH SIDE

195.50 kW

3 Phase	Hercules

ActronAir

ActronAir is constantly seeking ways to improve the design of its products, therefore specifications are subject to change without notice.
Please check prior to purchase. Copyright © 2017 Actron Engineering Pty. Ltd.

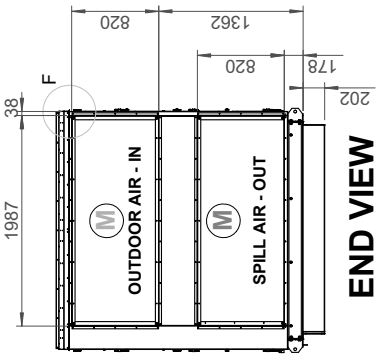

END VIEW

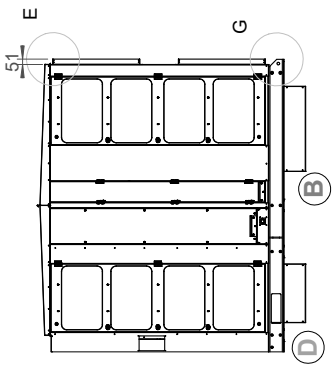

LH VIEW

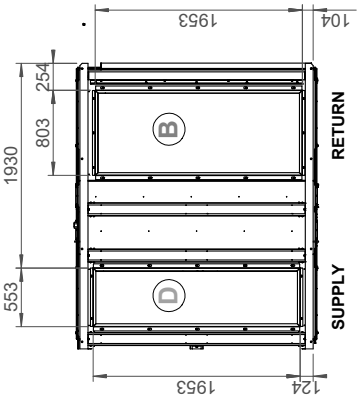

BOTTOM VIEW

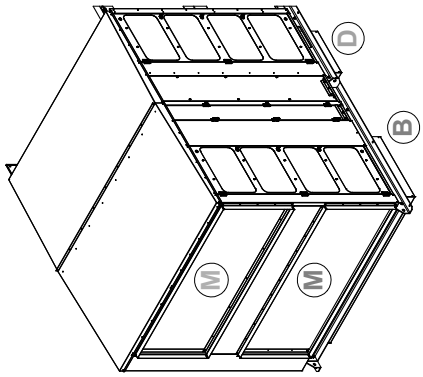

DETAILS OF SPIGOTS FOR ECONOMISER WITH SPILL-AIR "-M" VARIATION

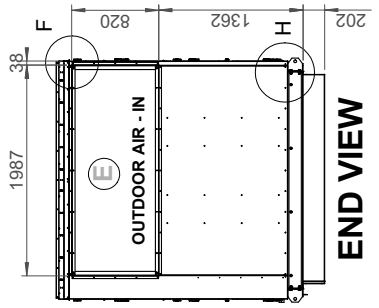

END VIEW

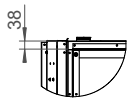

DETAIL F

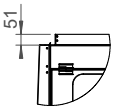

DETAIL E

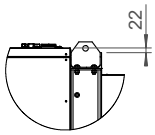

DETAIL H

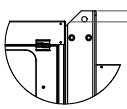

DETAIL G

DETAILS OF SPIGOTS FOR ECONOMISER WITHOUT SPILL-AIR "-E" VARIATION

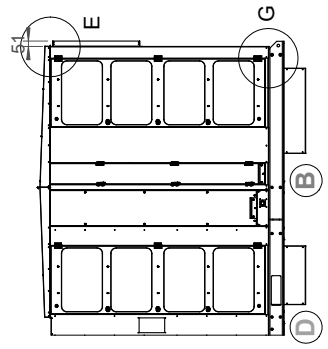

LH SIDE

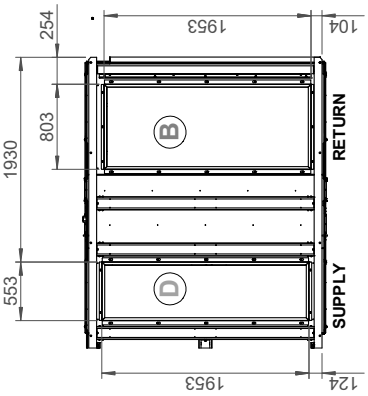

BOTTOM VIEW

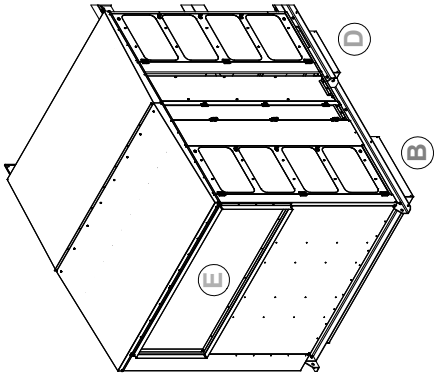

DETAILS OF SPIGOTS FOR ECONOMISER WITHOUT SPILL-AIR "-E" VARIATION

Please check prior to purchase. Copyright © 2017 Actron Engineering Pty. Ltd.